Series 167



AVENTICS™

AVENTICS Series 167 Tie-rod cylinder

EMERSON™

Series 167

The AVENTICS Series 167 is a tie rod cylinder according ISO 6431 and offers the highest robustness for tough environment.

- Ø 25 ... 100 mm
- Max. stroke: 1500 mm
- For high stroke frequencies and pulley applications
- Plug-in with tube nut / External thread



Overview drawing

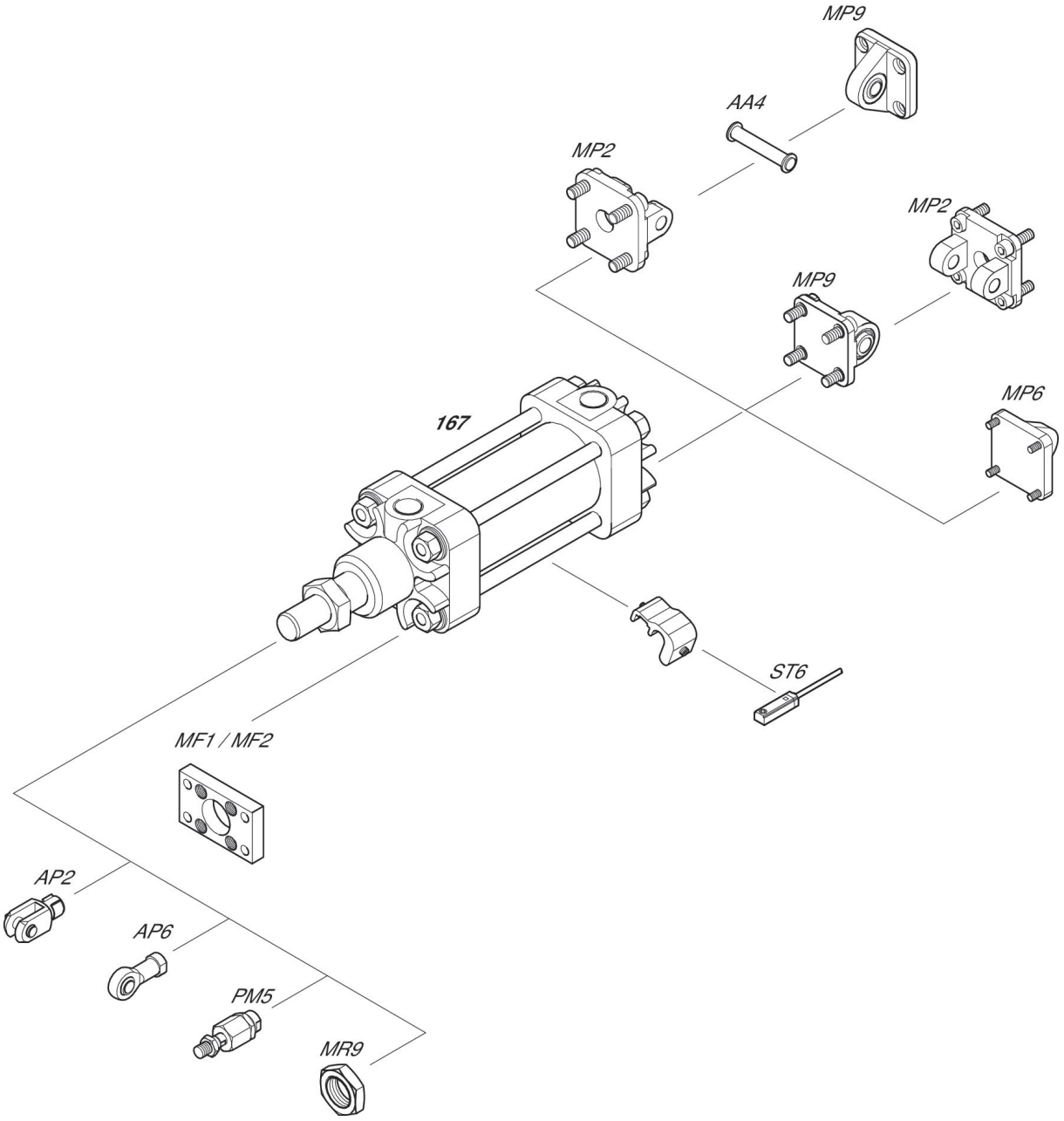

Product overview

Page

Tie rod cylinder pneumatic adjustable cushioning

Tie rod cylinder ISO 6431, Series 167 6
Double-acting - single - Pneumatic adjustable cushioning - Piston with magnet - External thread

Accessories overview Cylinder mountings

Clevis mounting MP2, Series CM1 10
for rear eye MP9 with rubber bushing - Aluminum - 167 CCL-IC CCL-IS
Rear eye MP6, aluminum 12
With ball joint and foot
Rear eye MP9 14
With rubber bushing round
Rear eye MP9 16
With rubber bushing Elongated hole
Trunnion mounting MT4, Series CM1 18
Bearing, Series CM1 19
for trunnion mounting
Bolts AA4, Series CM1 21
Steel, chrome-plated - with circlip

Accessories overview Piston rod mountings

Rod clevis with circlip, Series AP2 22
Rod clevis with split pin, Series AP2 23
Piston rod nut MR9 24
Rod clevis with circlip, Series AP2, Stainless Steel 27
Rod clevis with lock washer, Series AP2, Galvanized Steel 29
Rod clevis, Series PM6 31
Ball eye rod end AP6, galvanized Steel 33
with flange
Flexible spherical coupling, Series PM5 36
Flexible plate coupling, Series PM7 38

Sensors and sensor mountings, accessories

Sensors, Series SM6, with cable, without wire end ferrule, tin-plated 40
Sensors, Series SM6, with cable, plug M8x1 42
Plug
Sensor, Series ST6 44
without wire end ferrule, tin-plated - Reed
Sensor, Series ST6 45
without wire end ferrule, tin-plated - NPN
Sensor, Series ST6 46
without wire end ferrule, tin-plated - PNP
Sensor, Series ST6 48
without wire end ferrule, tin-plated - Reed
Sensor, Series ST6 50
open cable ends - PNP - ATEX
Sensor, Series ST6 51
Plug - M8x1
Sensor, Series ST6 54
Plug - M8
Sensor, Series ST6 56
Plug - M8 - PNP - ATEX

Product overview

Page

Sensor, Series ST6 58
Plug - M12

Sensor, Series ST6 60
Plug - M12 - PNP - ATEX

Sensor mounting, Series CB1 62
ST6 SM6

Sensor mounting, Series CB1 63
ST6 SM6

Round plug connector, Series CON-RD 64
Socket - M8x1 - 3-pin - straight - Soldering

Round plug connector, Series CON-RD 65
Socket - M8x1 - 3-pin - angled - Soldering

Round plug connector, Series CON-RD 66
Socket - M8x1 - 3-pin - straight - open cable ends - 3-pin

Round plug connector, Series CON-RD 68
Socket - M8x1 - 3-pin - angled - open cable ends - 3-pin

Accessories overview Silencer

AVENTICS Series SI1 Silencers 70
External thread - Sintered bronze

AVENTICS Series SI1 Silencers 72
External thread - Sintered bronze

Tie rod cylinder ISO 6431, Series 167

Standards: ISO 6431
Functional principle: Double-acting
Piston: Piston with magnet
Cushioning: Pneumatic adjustable cushioning
Piston rod: External thread
Piston rod: single
Compressed air connection: Internal thread
Ambient temperature min./max.: -20 °C ... 75 °C
Medium temperature min./max.: -20 °C ... 75 °C
Working pressure min./max.: 2 bar ... 10 bar
Material cylinder tube: Aluminum
Material piston rod: Stainless Steel
Material, front cover: Aluminum
Material of rear cover: Aluminum
Seal material: Acrylonitrile butadiene rubber
Technical information: Ø25 mm is not according to ISO 6431



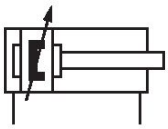

Piston Ø	25 mm	32 mm	40 mm	50 mm	63 mm	80 mm
Piston rod thread	M10x1,25	M10x1,25	M12x1,25	M16x1,5	M16x1,5	M20x1,5
Ports	G 1/8	G 1/8	G 1/4	G 1/4	G 3/8	G 3/8
Stroke 25	1670202000	1670302000	1670402000	1670502000	1670602000	1670802000
50	1670205000	1670305000	1670405000	1670505000	1670605000	1670805000
80	1670208000	1670308000	1670408000	1670508000	1670608000	1670808000
100	1670210000	1670310000	1670410000	1670510000	1670610000	1670810000
125	1670212000	1670312000	1670412000	1670512000	1670612000	1670812000
160	1670216000	1670316000	1670416000	1670516000	1670616000	1670816000
200	1670220000	1670320000	1670420000	1670520000	1670620000	1670820000
250	1670225000	1670325000	1670425000	1670525000	1670625000	1670825000
320	-	-	-	1670532000	1670632000	1670832000
400	-	-	-	1670540000	1670640000	1670840000
500	-	-	-	1670550000	1670650000	1670850000

Piston Ø	100 mm
Piston rod thread	M20x1,5
Ports	G 1/2
Stroke 25	1671002000
50	1671005000
80	1671008000
100	1671010000
125	1671012000
160	1671016000
200	1671020000
250	1671025000
320	1671032000

Piston Ø	100 mm
Piston rod thread	M20x1,5
Ports	G 1/2
400	1671040000
500	1671050000

Piston Ø	25 mm	32 mm	40 mm	50 mm	63 mm	80 mm
Retracting piston force	230 N	420 N	640 N	990 N	1680 N	2720 N
Extracting piston force	300 N	480 N	760 N	1180 N	1860 N	3000 N
Cushioning energy	2.3 J	-	-	-	-	-
Cushioning length	11 mm	13.5 mm	15 mm	17 mm	16.5 mm	19.5 mm
Weight 10 mm stroke	0.018 kg	0.021 kg	0.032 kg	0.042 kg	0.054 kg	0.072 kg
Weight 0 mm stroke	0.27 kg	0.45 kg	0.76 kg	1.1 kg	1.7 kg	2.5 kg
Stroke max.	1500 mm	1500 mm	1600 mm	1600 mm	1600 mm	1700 mm

Piston Ø	100 mm
Retracting piston force	4230 N
Extracting piston force	4680 N
Cushioning energy	-
Cushioning length	19.5 mm
Weight 10 mm stroke	0.1 kg
Weight 0 mm stroke	3.7 kg
Stroke max.	1700 mm

Dimensions

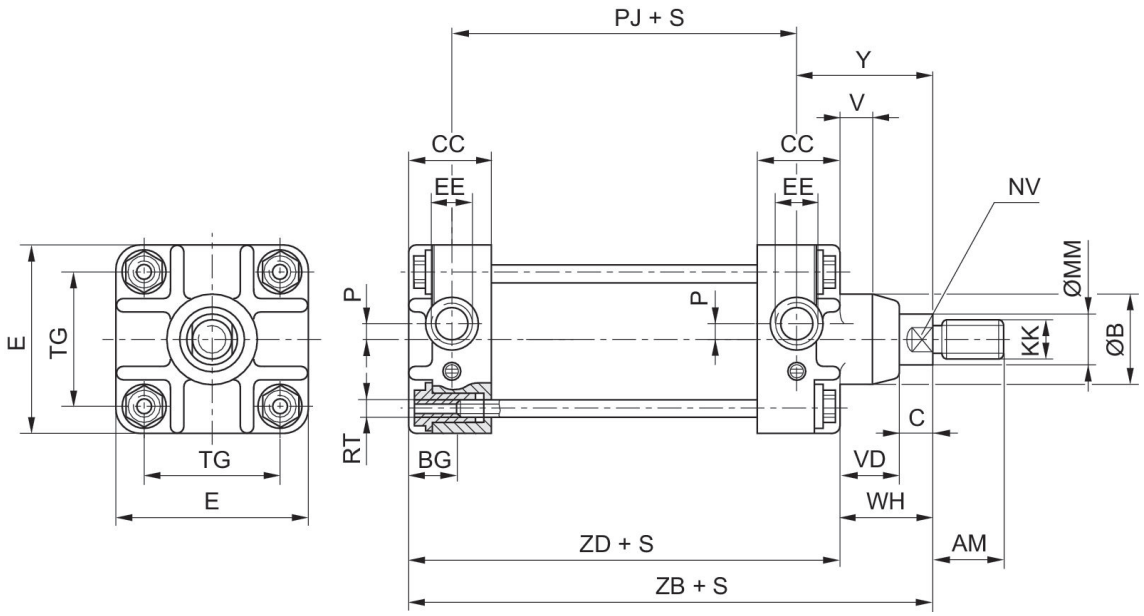

Piston Ø	AM	Ø B h12	BG	C	CC	E	EE	KK	Ø MM
25	22	23	12	8	20,0	40	G 1/8	M10x1,25	12
32	22	25	12	10	27,5	47	G 1/8	M10x1,25	12
40	24	35	15	13	30,0	56	G 1/4	M12x1,25	16
50	32	40	15	15	30,0	63	G 1/4	M16x1,5	20
63	32	40	19	14	34,0	81	G 3/8	M16x1,5	20
80	40	48	19	16	36,0	95	G 3/8	M20x1,5	25
100	40	55	23	16	40,0	115	G 1/2	M20x1,5	25

Piston Ø	NV	P	PJ	RT	TG	V	VD	WH	Y
25	10	–	58	M5	27	–	16	24	31
32	10	4	65	M5	32	5	16	26	41
40	13	4	69	M6	40	5	20	33	48
50	17	4	72	M6	46	6	23	38	54
63	17	6	79	M8	59	6	27	41	58
80	22	9	86	M8	73	8	32	48	67
100	22	12	100	M10	90	8	37	53	70

Piston Ø	ZB	ZD	stroke tolerance
25	98 ±1,2	74	+2/–1
32	120 ±1,2	94	+2/–0
40	132 ±1,2	99	+2/–0
50	142 ±1,2	104	+2/–0
63	154 ±1,4	113	+2,5/–0
80	172 ±1,4	124	+2,5/–0
100	187 ±1,4	134	+2,5/–0

Cushioning diagram

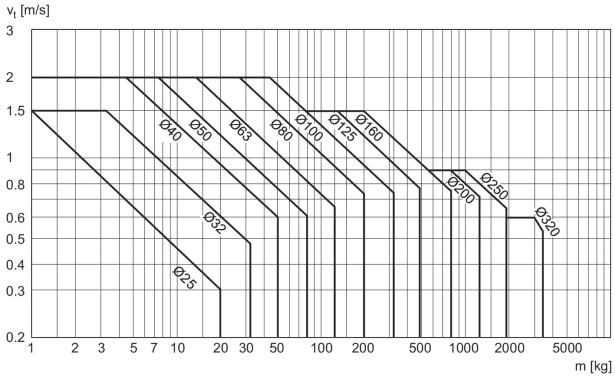

V = velocity [m/s]
m = mass

Clevis mounting MP2, Series CM1

for series: 167, CCL-IC, CCL-IS



Piston diameter [mm]	Swivel bearing Ø [mm]	Material	Part No.
25	10	Aluminum	3682902590
32	10	Aluminum	3672903000
40	12	Aluminum	3672904000
50	12	Aluminum	3672905000
63	16	Aluminum	3672906000
80	16	Aluminum	3672908000
100	20	Aluminum	3672910000

Dimensions

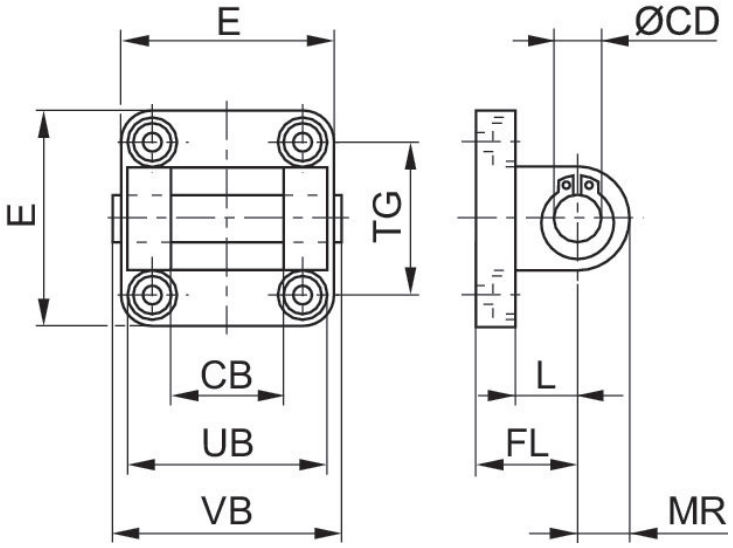

Part No.	Cylinders Ø	CB H14	Ø CD H9	E max.	FL	L min.	MR	UB h14	VB
3682902590	25	18	10	40	20	14	9	36	42,5
3672903000	32	26	10	47,5	22	12	11	45	64
3672904000	40	28	12	53,5	25	15	13	52	71
3672905000	50	32	12	64	27	15	13	60	79
3672906000	63	40	16	74	32	18	17	70	93
3672908000	80	50	16	95	36	20	17	90	113
3672910000	100	60	20	113,5	41	25	21	110	133

Part No.	Cylinders Ø	TG *contains elon-gated hole
3682902590	25	26/27*
3672903000	32	32
3672904000	40	40*
3672905000	50	46
3672906000	63	59*
3672908000	80	73
3672910000	100	90*

Rear eye MP6, aluminum

Type: With ball joint and foot
Mounting type: Rear eye

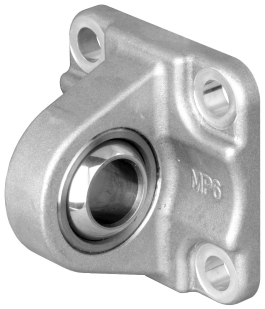

Piston diameter [mm]	Swivel bearing Ø [mm]	Standardization	Material	Part No.
25	10	ISO 21287	Aluminum	3663602000
32	10	ISO 6431	Aluminum	3663603000
40	12	ISO 6431	Aluminum	3663604000
50	12	ISO 6431	Aluminum	3663605000
63	16	ISO 6431	Aluminum	3663606000
80	16	ISO 6431	Aluminum	3663608000
100	20	ISO 6431	Aluminum	3663610000

Dimensions

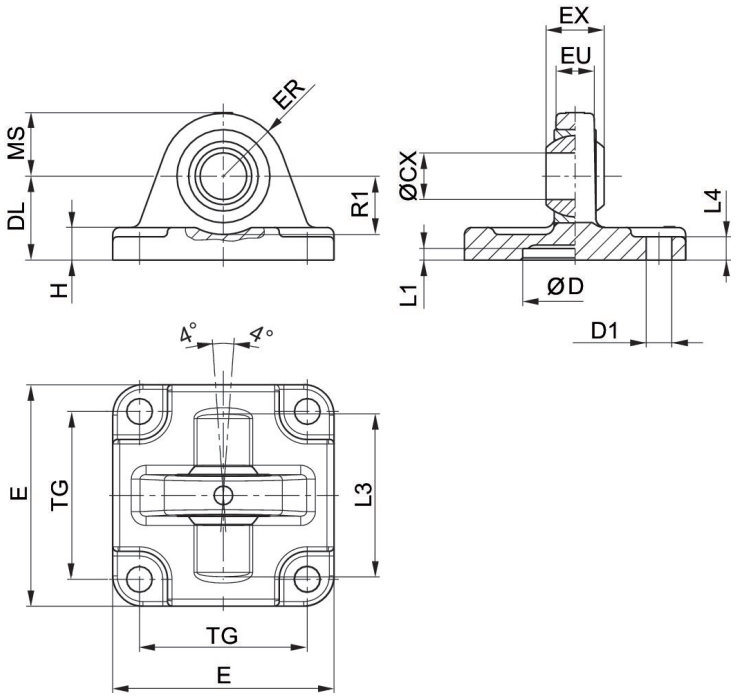

Scope of delivery: clevis incl. mounting screws

Piston Ø	Part No.	ØCX H7	ØD H11	ØD1 H13	DL ±0,2	E	EX –0,1	ER	EU
25	3663602000	10	18	5,5	20	40	9	14	8
32	3663603000	10	20	5.5	22	46	9	15	8
40	3663604000	12	30	6.6	28	55	12	17	9.5
50	3663605000	12	40	6,6	28	62	12	17	9.5
52,5	5220163442	10	–	7.5	29	45	14	15	10.5
63	3663606000	16	55	9	36	80	16	25	12,5
75	5220363442	12	–	10	26	65	16	18	12
80	3663608000	16	70	9	38	94	16	28	12,5
85, 95	5220463442	16	–	10	30	75	21	22	15
100	3663610000	20	90	11	43	114	20	35	16
115	5220563442	16	–	12	37.5	95	21	25	15

Piston Ø	H	L1 min.	L3	L4	MS -0,5	R1 min.	TG
25	6	3	–	3	14	–	26
32	6	0.5	42	6	15	16	32
40	8	0.5	48	8	17	16	32
50	9	0,5	55	9	17	18	46
52,5	8	–	–	–	–	–	33
63	11	0,5	70	11	25	21	59
75	10	–	–	–	–	–	49
80	12	0,5	80	12	28	21	73
85, 95	10	–	–	–	–	–	59
100	15	0,5	100	15	35	28	90
115	12	–	–	–	–	–	75

Rear eye MP9

Type: With rubber bushing, round
Mounting type: Clevis mounting with rubber bushing



Piston diameter [mm]	Swivel bearing Ø [mm]	Standardization	Material	Part No.
32	10	ISO 15552	Aluminum	3683203000
50	12	ISO 15552	Aluminum	3683205000
80	16	ISO 15552	Aluminum	3683208000
50	12		Aluminum	3663205000
80	16		Aluminum	3663208000

Dimensions

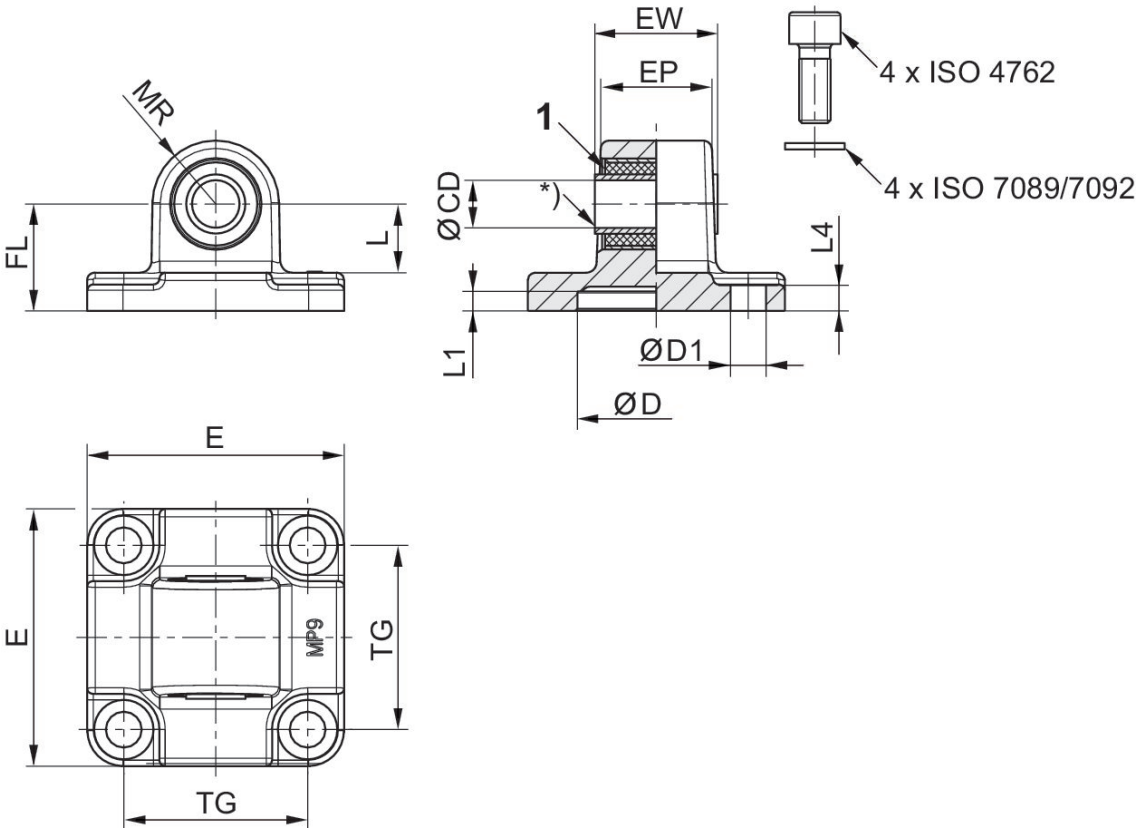

1) Rubber bushing

Piston Ø	Part No.	CD H11	CD H9	E	EW	EP	TG	FL ±0,2	L 1)
32	3683203000	10	-	46	25.5	18,9	32.5	22	13.8
50	3683205000	-	12	65	31	28	46.5	27	17.3
50	3663205000		12	65	31	28	46	27	17.3
80	3663208000		16	94.5	49.5	43	73	36	21.8
80	3683208000	-	16	94.5	49.5	43	72	36	21.8
125	R412015973	-	25	138	69.5	60	110	50	33.8

Piston Ø	MR	L1	L4	D H11	D1 H13
32	12.5	5	5.5	30	6.6
50	16	5	6.5	40	9
50	18	5	6.5	40	6.6
80	22	5	6.5	45	8.5
80	22	5	10	45	11
125	34	7.5	10	60	13.5

Rear eye MP9

Type: With rubber bushing, Elongated hole
Mounting type: Clevis mounting with rubber bushing



Piston diameter [mm]	Swivel bearing Ø [mm]	Standardization	Material	Part No.
25	10	ISO 21287	Die-cast aluminum	3683202000
40	12	ISO 15552	Aluminum	3683204000
63	16	ISO 15552	Aluminum	3683206000
100	20	ISO 15552	Aluminum	3683210000

Dimensions

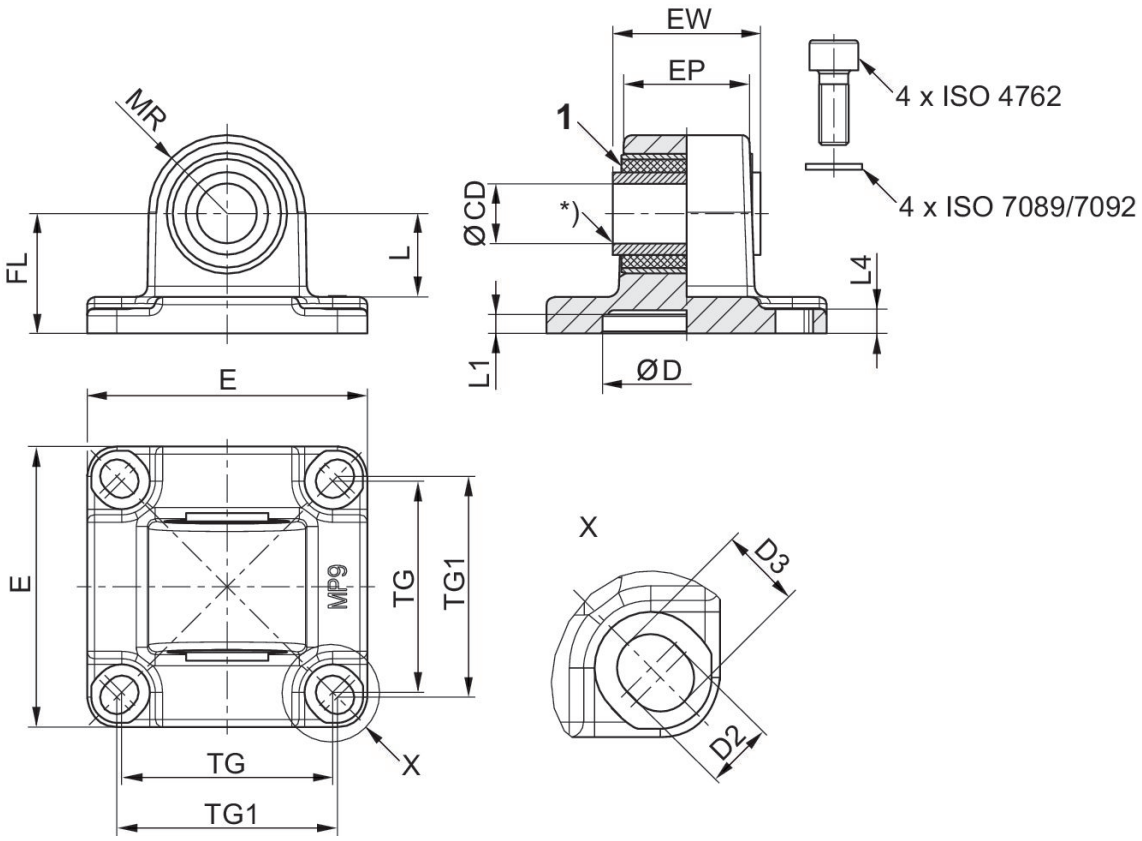

1) Rubber bushing

Piston Ø	Part No.	CD H11	CD H9	E	EW	EP	TG	TG1 ±0,2	FL ±0,2
25	3683202000	10	-	40	17.5	14,5	26	27	20
40	3683204000	-	12	53	27	23,5	38	40	25
63	3683206000	-	16	75	39.5	33.5	56.5	59	32
100	3683210000	-	20	114	59.5	54	89	90	41

Piston Ø	L 1)	MR	L1	L4	D H11	D2 -0,2	D3 -0,2
25	14.8	12,5	3	3	18	5,5	6,2
40	16.3	15	5	5.5	35	6.6	8
63	22.3	21	5	6.5	45	–	–
100	25.8	25	5	10	55	11	11.7

Trunnion mounting MT4, Series CM1

For series: 167



Piston diameter [mm]	Material	Part No.
32	Steel, chrome-plated	3672803000
40	Steel, chrome-plated	3672804000
50	Steel, chrome-plated	3672805000
63	Steel, chrome-plated	3672806000
80	Steel, chrome-plated	3672808000
100	Steel, chrome-plated	3672810000

Dimensions

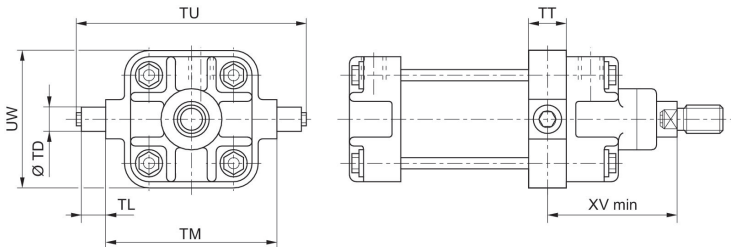

Piston Ø	Part No.	TT	TD e9	TL h14	TM h14	TU	UW	XV min
32	3672803000	16	12	12	50	74	48	61,5
40	3672804000	23	16	16	63	95	61	74,5
50	3672805000	23	16	10	75	107	71	79,5
63	3672806000	33	20	20	90	130	86	91,5
80	3672808000	33	20	20	110	150	112	100,5
100	3672810000	45	25	25	132	182	134	115,5

Bearing, Series CM1



Piston diameter [mm]	Swivel bearing Ø [mm]	Material	Part No.
25	10	Aluminum	3671202000
32	12	Aluminum	3671203000
40, 50	16	Aluminum	3671204000
63, 80	20	Aluminum	3671206000
100, 125	25	Aluminum	3671210000

Dimensions

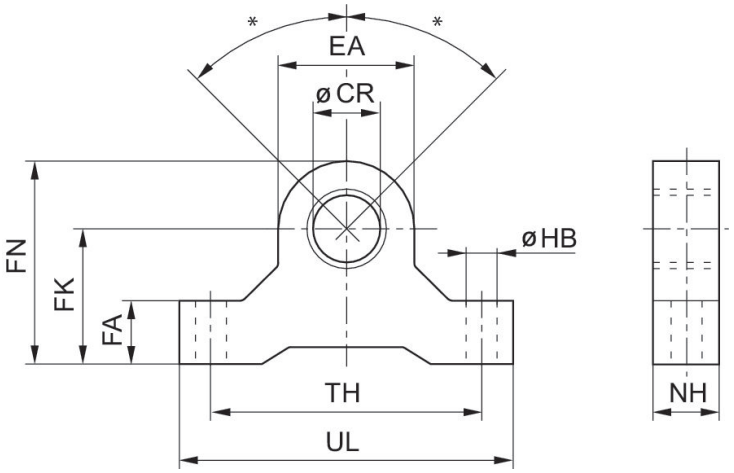

* Max. pendulum movement for cylinders with rear eye MP6 with ball joint: ±45°

Piston Ø	Part No.	Ø CR H8	EA	FA	FK ±0,1	FN	HB	NH	TH
25	3671202000	10	16	10	21	29	5.5	10	27
32	3671203000	12	19	11	22	32	6.6	11	44
40, 50	3671204000	16	28	16	35	49	9	16	65
63, 80	3671206000	20	38	19	40	59	9	19	80
100, 125	3671210000	25	46	22	48	71	11	22	96
100	3671212000	30	56	28	57	88	13	28	114
160, 200	3671216000	32	66	32	70	103	17	32	140
250, 320	3671220000	35	66	32	70	103	17	32	140

Piston Ø	UL
25	37
32	55
40, 50	82
63, 80	99
100, 125	118
100	142
160, 200	172
250, 320	172

Bolts AA4, Series CM1

Material: Steel, chrome-plated



Piston diameter [mm]	Part No.
25, 32	3661302000
40, 50	3661303000
63, 80	3661304000
100	3661306000

Dimensions

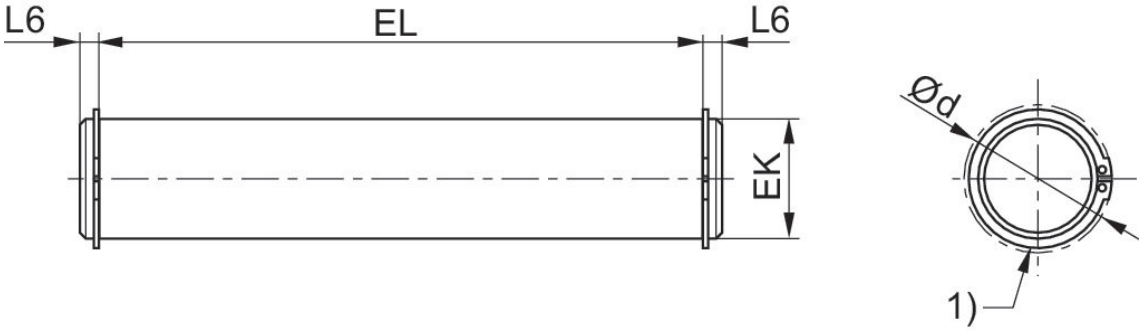

1) circlip DIN 471

Piston Ø	Part No.	Ø d max.	EK e8	EL	L6 max.
25, 30	3661302000	19	10	29.2	2.4
40, 50	3661303000	21	12	34.4	2.8
63, 80	3661304000	28	16	48.4	2.8
100	3661306000	40	20	58.4	3.3
125	5236000092	34.2	25	132 +0,5	3.75
160, 200	5237000092	40.5	30	172 +0,5	4.25
250	5239000092	52.6	40	202 +0,5	6.75
320	5239010092	59.1	45	222 +0,5	7.25

Rod clevis with circlip, Series AP2

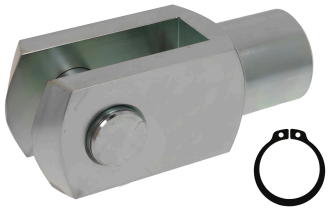

Suitable piston rod thread	for series	Weight [kg]	Part No.
M27x2	PRA, TRB, CCL-IS, 167, CVI	2	1827001493

Dimensions

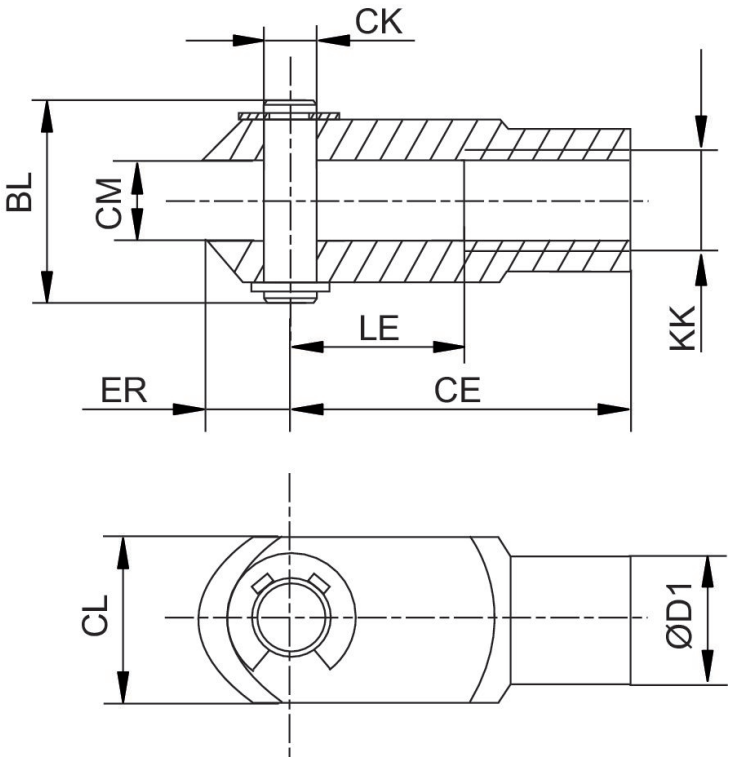

Part No.	BL	CE	ØCK	CL	CM	ØD1	ER	KK	LE
1827001493	68	110	30 *	55	30	48	38	M27x2	54
1827001471	80	144	35 *	70	35	60	44	M36x2	72
1827001472	98	168	40 **	85	40	70	64	M42x2	84

* ØCK h11
** ØCK f8

Rod clevis with split pin, Series AP2

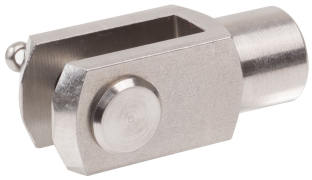

Suitable piston rod thread	for series	Weight [kg]	Part No.
M48x2	ITS	9.7	8958019332

Dimensions

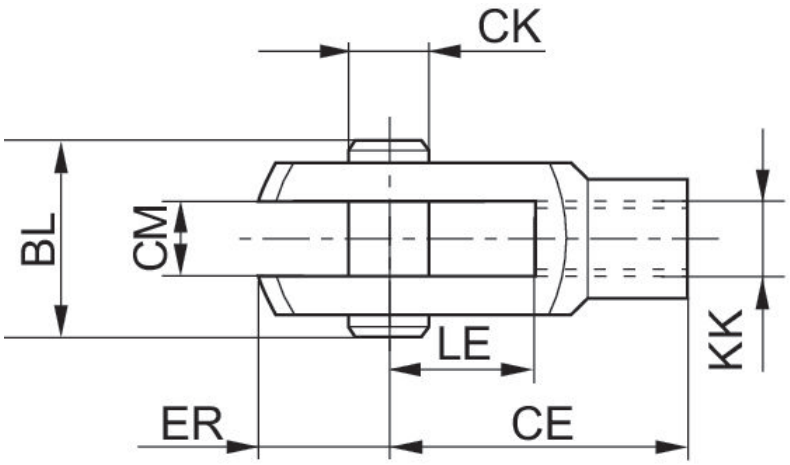

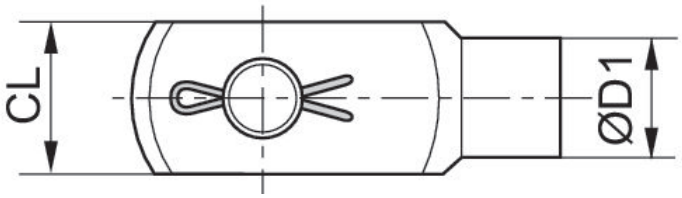

Part No.	BL	CE	ØCK h11	CL	CM	ØD1	ER	KK	LE
8958019332	122	192	50	96	50	82	73	M48x2	96

Piston rod nut MR9



Thread size	Material	Part No.
M48x2	Steel, chrome-plated	8103190434
M12x1,25	Stainless Steel	3590304000
M16x1,5	Stainless Steel	3590305000
M20x1,5	Stainless Steel	3590308000
M24x2	Steel, chrome-plated	8103190394

Dimensions

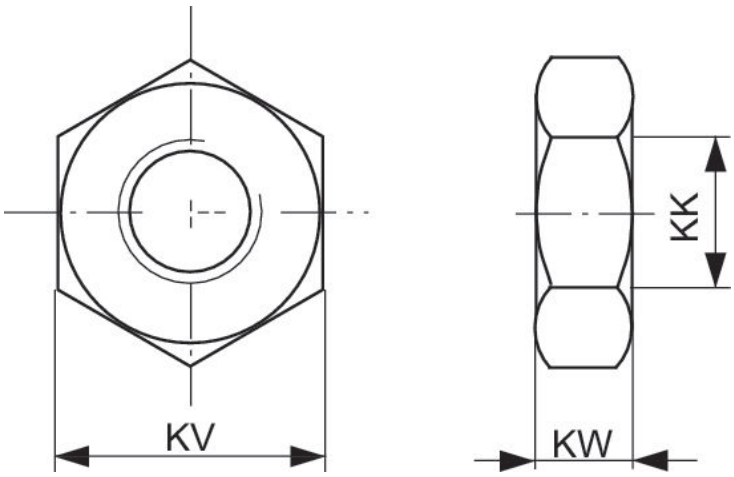

Part No.	KK	KV	KW
8103040114	M4		
1823300033	M6	10	3.2
1823300034	M8	13	4
8103040224	M10	17	8
1823A00020	M10x1,25		
8103060064	M12	19	10
1823A00021	M12x1,25	19	6
8103190344	M12x1,25	19	6
1823300030	M16x1,5	24	8
1823300031	M20x1,5	30	10
8103040344	M20x1,5	30	10
8103190394	M24x2	36	12
1823A00029	M27x2	41	13.5
8103190414	M36x2	50	16
8103190424	M42x2	60	21
8103190434	M48x2	65	25
3330310000	M4	7	2.2
8103190644	M6	10	3.2
3330316000	M6		
8103190164	M8	13	4
3330320000	M8		
8103190464	M10x1,25	17	5
3590302000	M10x1,25		
3590304000	M12x1,25	19	6
3590305000	M16x1,5	24	8
3590308000	M20x1,5	30	10
2990600303	M10x1,25	17	5
2990600304	M12x1,25	19	6
2990600305	M16x1,5	24	8
2990600308	M20x1,5	30	10
2990600312	M27x2	41	13.5
2990600316	M36x2	50	16
2990600325	M42x2	60	21

Rod clevis with circlip, Series AP2, Stainless Steel

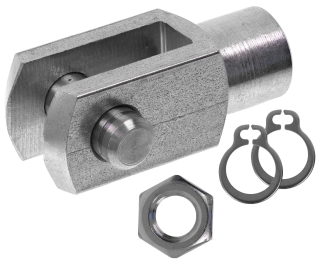

Suitable piston rod thread	for series	Weight [kg]	Part No.
M10x1,25	CCL-IC/-IS, CCI, CSL-RD, ICM, ICS-D2, SSI, 167	0.1	3590502000
M12x1,25	CCL-IC/-IS, CCI, CSL-RD, ICM, ICS-D2, SSI	0.156	3590504000
M16x1,5	CCL-IC/-IS, CCI, CSL-RD, ICM, ICS-D2, SSI	0.362	3590505000
M20x1,5	CCL-IC/-IS, CCI, CSL-RD, ICM, ICS-D2, SSI	0.72	3590508000

Part No.	CE	ØCK	CL	CM B12	ER	BL	KK	LE
3330510000	16	4 *	8	4	5	11	M4	8
3330516000	24	6 *	12	6	7	17	M6	12
3330520000	32	8 **	16	8	10	24	M8	16
3590502000	40	10 **	20	10	12	27	M10x1,25	20
3590504000	48	12 **	24	12	14	33	M12x1,25	24
3590505000	64	16 **	32	16	19	43	M16x1,5	32
3590508000	80	20 **	40	20	25	53	M20x1,5	40

* ØCK h11
** ØCK e8

3590502000, 3590504000, 3590505000, 3590508000

Dimensions

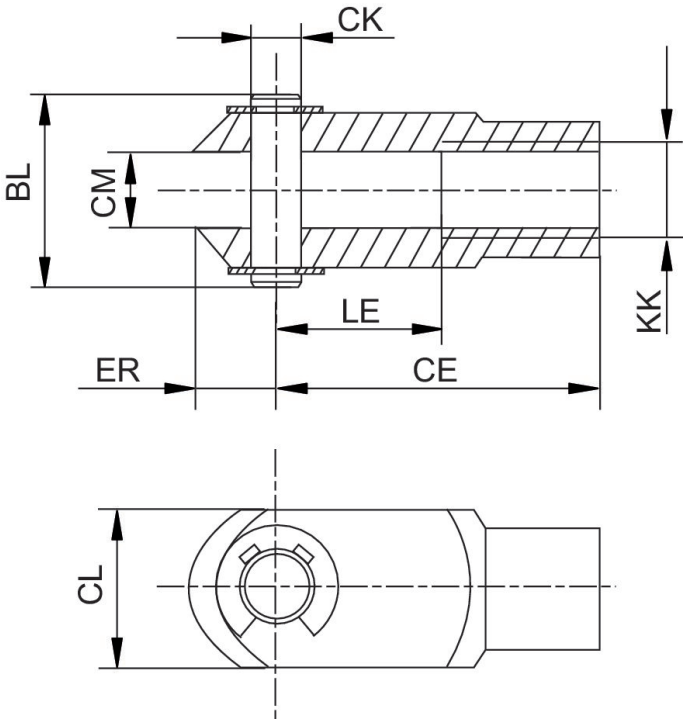

Rod clevis with lock washer, Series AP2, Galvanized Steel

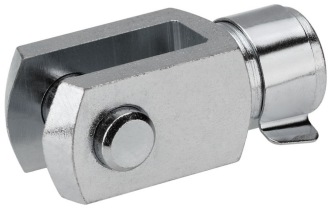

Suitable piston rod thread	for series	Weight [kg]	Part No.
M10x1,25	PRA, TRB, CCI, MNI, ICM, KPZ, 167, CVI, RPC, RDC	0.1	1822122024
M12x1,25	PRA, TRB, CCI, KPZ, 167, CVI, RPC, 102	0.16	1822122025
M16x1,5	PRA, TRB, CCI, KPZ, 167, CVI, RPC, RDC, 102	0.4	1822122005
M20x1,5	PRA, TRB, KPZ, 167, CVI, 102	0.7	1822122004

Dimensions

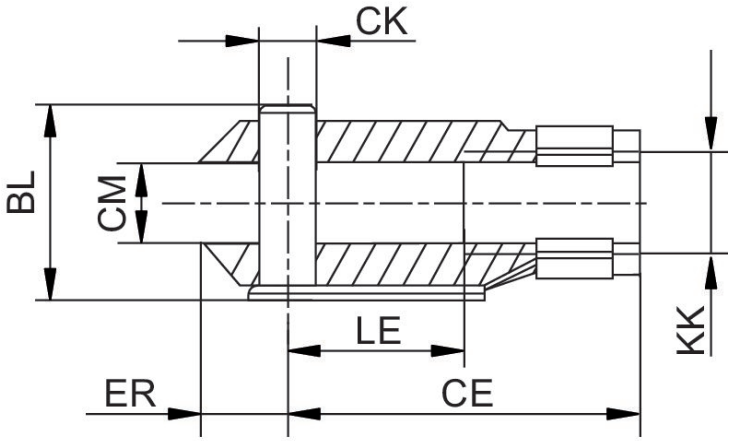

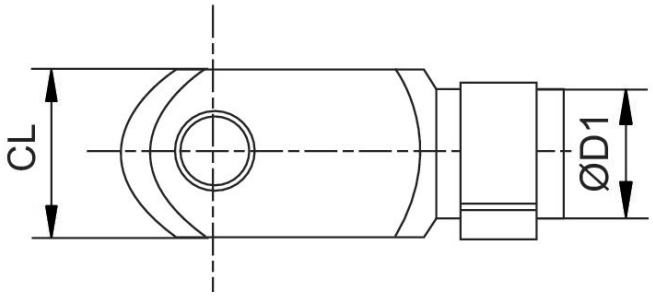

Part No.	BL	CE	ØCK h11	CL	CM	ØD1	ER	KK	LE
1822122028	11	16	4	8	4	8	5	M4	8
1822122008	13.5	20	5	10	5	9	6	M5	10
1822122009	16	24	6	12	6	10	7	M6	12
1822122010	21,5	32	8	16	8	14	10	M8	16
8958000122	26	40	10	20	10	18	12	M10	20
1822122024	26	40	10	20	10	18	12	M10x1,25	20
8958000132	31	48	12	24	12	20	14	M12	24
1822122025	31	48	12	24	12	20	14	M12x1,25	24
1822122005	39	64	16	32	16	26	19	M16x1,5	32
1822122004	50	80	20	40	20	34	20	M20x1,5	40

Rod clevis, Series PM6



for series	Swivel bearing Ø [mm]	Part No.
AP6	14	1822122032
AP6	16	1822122033
AP6	21	1822122034
AP6	25	1822122035

Dimensions

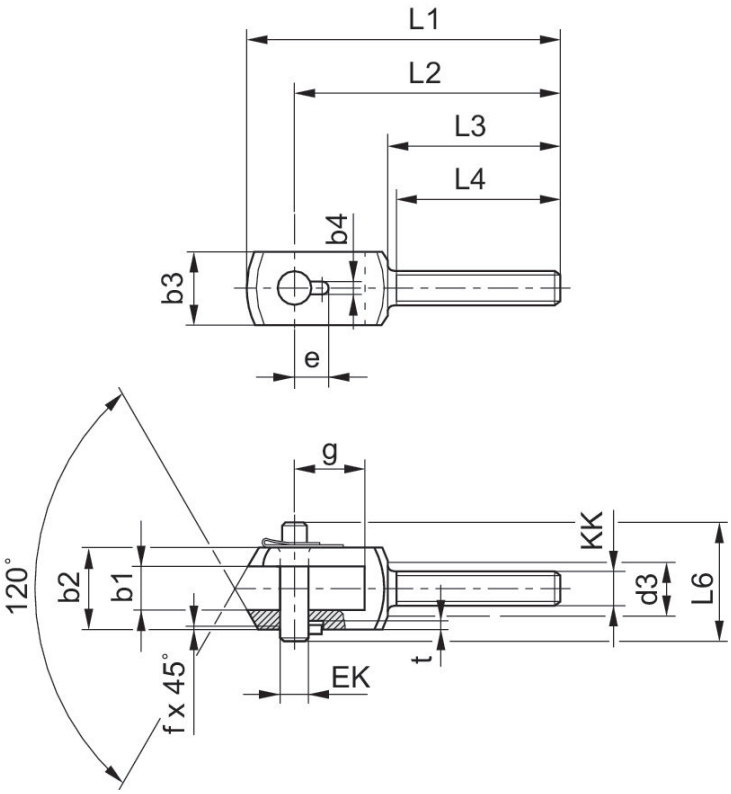

Part No.	b1 B12	b2 d12	b3	b4 +0,2	d3	e +0,3	EK	f	g
1822122032	14	28	20	3.3	17	11.5	10	0.7	20
1822122033	16	30	25	4.3	19	12	12	1	26
1822122034	21	40	35	4.3	24	14	16	1	31
1822122035	25	50	40	4.3	30	16	20	1	43
1822122036	37	67	60	6.3	38	24	30	1.5	54

Part No.	L1	L2	L3	L4 +1	L6	KK	t +0,2
1822122032	90	78	53	50	35	14	3
1822122033	108	92	58	55	39	16	3
1822122034	129	108	65	62	50	21	3
1822122035	156	131	73	69	60	25	3
1822122036	200	168	98	92	77	30	5

Ball eye rod end AP6, galvanized Steel

Mounting: with flange



Suitable piston rod thread	for series	Swivel bearing Ø [mm]	Weight [kg]	Part No.
M24x2		25	0.734	8958208002
M10x1,25	PRA, TRB, MNI, CCI, SSI, RPC, KPZ, 167, CVI, RDC	10	0.07	1822124003
M12x1,25	PRA, TRB, CCI, SSI, RPC, KPZ, 167, CVI, 102	12	0.12	1822124004
M16x1,5	PRA, TRB, CCI, SSI, RPC, KPZ, 167, CVI, RDC, 102	16	0.21	1822124005
M20x1,5	PRA, TRB, KPZ, 167, CVI, 102	20	0.38	1822124006
M36x2		35	1.67	1822124008
M42x2		40	2.41	1822124009
M48x2		50	4.88	8958208842
M27x2	PRA, TRB, 167, CVI	30	1.17	1822124013

Dimensions

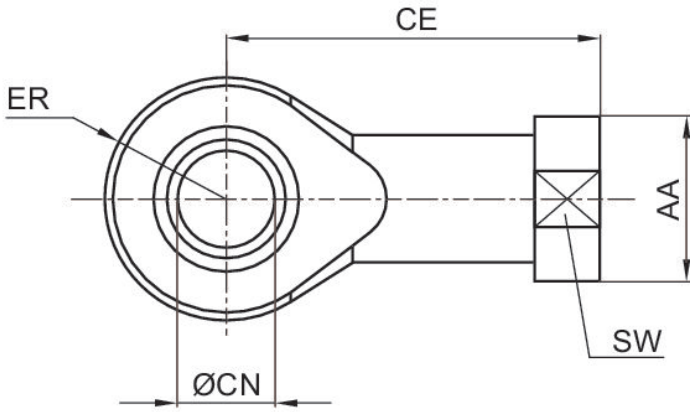

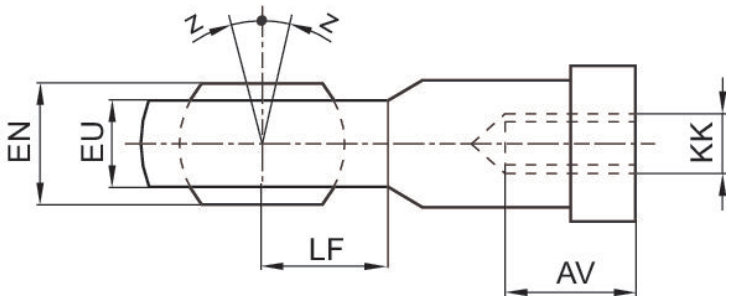

KK	Part No.	AA	AV min.	CE	Ø CN H7	EN –0,1	ER	EU max.	LF
M4	1822124000	12	8	27	5	8	9	7.5	9
M6	1822124001	13	9	30	6	9	10	7.5	10
M8	1822124002	16	12	36	8	12	12	9.5	12
M10	8958206402	19	20	43	10	14	14	10.5	13
M12	8958208852	22	22	50	12	16	16	12	16
M10x1,25	1822124003	19	15	43	10	14	14	11.5	14
M12x1,25	1822124004	22	18	50	12	16	16	12.5	16
M16x1,5	1822124005	27	24	64	16	21	21	15.5	21
M20x1,5	1822124006	34	30	77	20	25	25	18.5	25
M24x2	8958208002	42	36	94	25	31	30	23	30
M27x2	1822124013	50	45	110	30	37	35	27	35
M36x2	1822124008	60	56	125	35	43	40	32	40
M42x2	1822124009	69	60	142	40	49	45.5	37	45
M48x2	8958208842	75	65	160	50	60	58	45	60

KK	SW	Z [°] max.
M4	9	4
M6	11	4
M8	14	4
M10	17	6
M12	19	13
M10x1,25	17	4
M12x1,25	19	4
M16x1,5	22	4
M20x1,5	30	4
M24x2	36	15
M27x2	41	4
M36x2	50	4
M42x2	55	4
M48x2	65	6

Flexible spherical coupling, Series PM5



Suitable piston rod thread	for series	Weight [kg]	Part No.
M10x1,25	PRA/TRB, CCL-IC/-IS, CCI, SSI, KPZ, 167, CVI, RPC	0.21	R412026142
M12x1,25	PRA/TRB, CCL-IC/-IS, CCI, SSI, KPZ, 167, CVI, RPC	0.21	R412026143
M16x1,5	PRA/TRB, CCL-IC/-IS, CCI, KPZ, 167, CVI, RPC, RDC	0.65	R412026144
M20x1,5	PRA/TRB, CCL-IS, SSI, KPZ, 167, CVI	0.68	R412026145

Dimensions

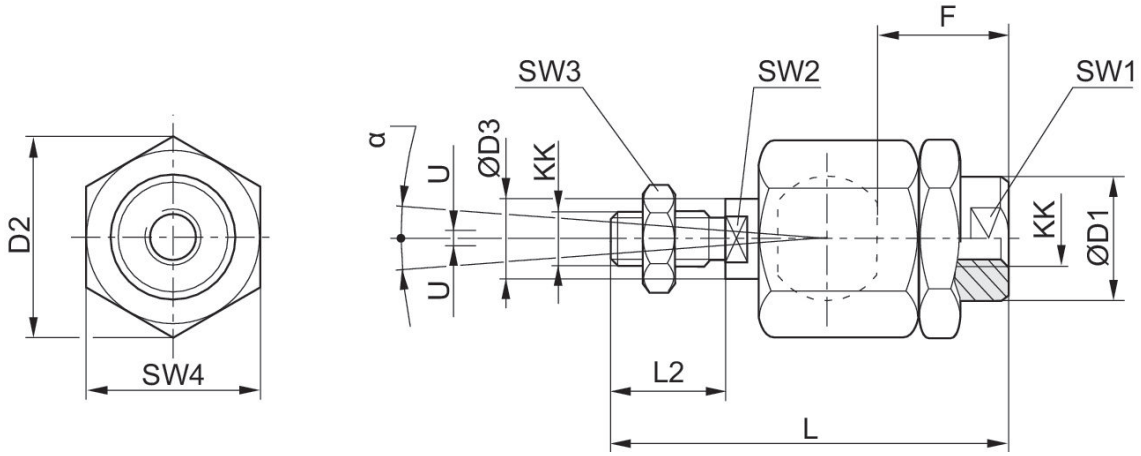

* Radial joint

Part No.	KK	Ø D1	D2	Ø D3	F	L ±2	L2	SW1	SW2
1826409008	M4	12	13.5	4	13	33	8	12	3.2
R412007860	M5	8.5	14.8	6	12	38.5	13.5	7	5
R412026140	M6x1	8.5	14.5	6	11	36.5	11	7	5
R412026141	M8x1.25	12.5	19	8	21	58	21	11	7
R412026142	M10x1.25	22	32	14	23	74.5	23	19	12
R412026143	M12x1.25	22	32	14	24	75	24	19	12
R412026144	M16x1.5	32	45	22	30	103	30	30	20
R412026145	M20x1.5	32	45	22	40	119	40	30	20
1826409006	M27x2	62	62	28	48	147	54	32	24
1826409007	M36x2	80	80	38	86	241	72	50	32
R412007729	M42x2	64	98	42	96	271	82	60	36

Part No.	SW3	SW4	U	α [°]	1)
1826409008	7	11	0,5	8	0.05-0.2
R412007860	8	13	0,5	8	0.05-0.2
R412026140	10	13	0,7	6	0.05-0.5
R412026141	13	17	0,7	8	0.05-0.5
R412026142	17	30	1	8	0.05-0.5
R412026143	19	30	1	7	0.05-0.5
R412026144	24	41	1	6	0.05-0.5
R412026145	30	41	1	6	0.05-0.5
1826409006	41	55	1	8	0.05-0.2
1826409007	55	75	1	8	0.05-0.2
R412007729	65	85	1	8	0.05-0.2

1) Axial play

Flexible plate coupling, Series PM7



Suitable piston rod thread	for series	Weight [kg]	Part No.
M10x1,25	PRA/TRB, CCL-IC/-IS, CCI, SSI, KPZ, 167, RPC	0.3	1827001629
M12x1,25	PRA/TRB, CCL-IC/-IS, CCI, SSI, KPZ, 167, RPC	0.4	1827001630
M16x1,5	PRA/TRB, CCL-IC/-IS, CCI, SSI, KPZ, 167, RPC	0.9	1827001631
M20x1,5	PRA/TRB, CCL-IS, SSI, KPZ, CVI, 167	1.15	1827001632

Dimensions

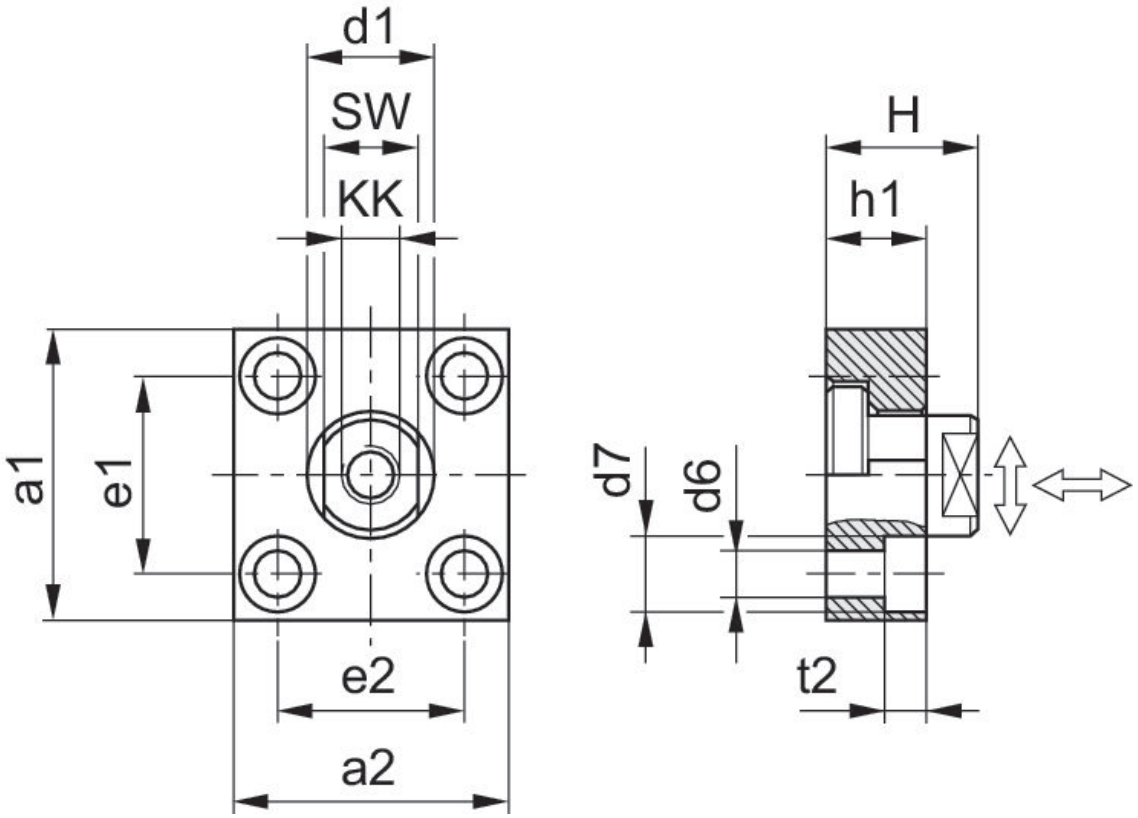

Part No.	KK	a1	a2	d1 h11	d6 H13	d7 H13	e1 H13	e2	h1
1827001629	M10x1.25	60	37	20	6.6	11	36 ±0,15	23 ±0,15	15
1827001630	M12x1.25	60	56	25	9	15	42 ±0,2	38 ±0,2	20
1827001631	M16x1.5	80	80	30	11	18	58 ±0,2	58 ±0,2	20
1827001632	M20x1.5	90	90	40	14	20	65 ±0,3	65 ±0,3	20
1827001633	M27x2	90	90	40	14	20	65 ±0,3	65 ±0,3	20
1827001634	M36x2	125	125	60	18	26	90 ±0,3	90 ±0,3	30

Part No.	t2	H	SW	Tightening torque for the coupling pin Ma ± 5%	Axial play min./max.	Radial play min./max.
1827001629	7	24	17	17 Nm	0,4 - 0,8 mm	1,9 - 2,3 mm
1827001630	9	30	19	29 Nm	0,4 - 0,8 mm	1,9 - 2,3 mm
1827001631	11	32	24	71 Nm	0,4 - 0,8 mm	1,9 - 2,3 mm
1827001632	13	35	36	138 Nm	0,4 - 0,8 mm	1,9 - 2,3 mm
1827001633	13	35	36	350 Nm	0,4 - 20,31 mm	1,9 - 2,3 mm
1827001634	17	55	50	1080 Nm	0,4 - 0,95 mm	2,8 - 3,4 mm

Sensors, Series SM6, with cable, without wire end ferrule, tin-plated

: with cable
Certificates: cULus
Direct mounting for series: PRA, PRE, CCI, KPZ, SSI, GPC, CVI
Indirect mounting for series: TRB, ITS, 167, MNI, ICM, TRR
Ambient temperature min./max.: -20 °C ... 70 °C



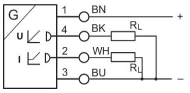

Switch descr.	Cable length L [m]	max. measuring range [mm]	Overall length Sensor [mm]	Version	Part No.
Analog	2	32	45	short circuit resistant, Protected against polarity reversal, Overload protection	R412010141
Analog	2	64	77	short circuit resistant, Protected against polarity reversal, Overload protection	R412010143
Analog	2	96	109	short circuit resistant, Protected against polarity reversal, Overload protection	R412010262
Analog	2	128	141	short circuit resistant, Protected against polarity reversal, Overload protection	R412010264
Analog	2	160	173	short circuit resistant, Protected against polarity reversal, Overload protection	R412010411
Analog	2	192	205	short circuit resistant, Protected against polarity reversal, Overload protection	R412010413
Analog	2	224	237	short circuit resistant, Protected against polarity reversal, Overload protection	R412010415
Analog	2	256	269	short circuit resistant, Protected against polarity rever-	R412010417

Switch descr.	Cable length L [m]	max. measuring range [mm]	Overall length Sensor [mm]	Version	Part No.
				sal, Overload protection	

Dimensions

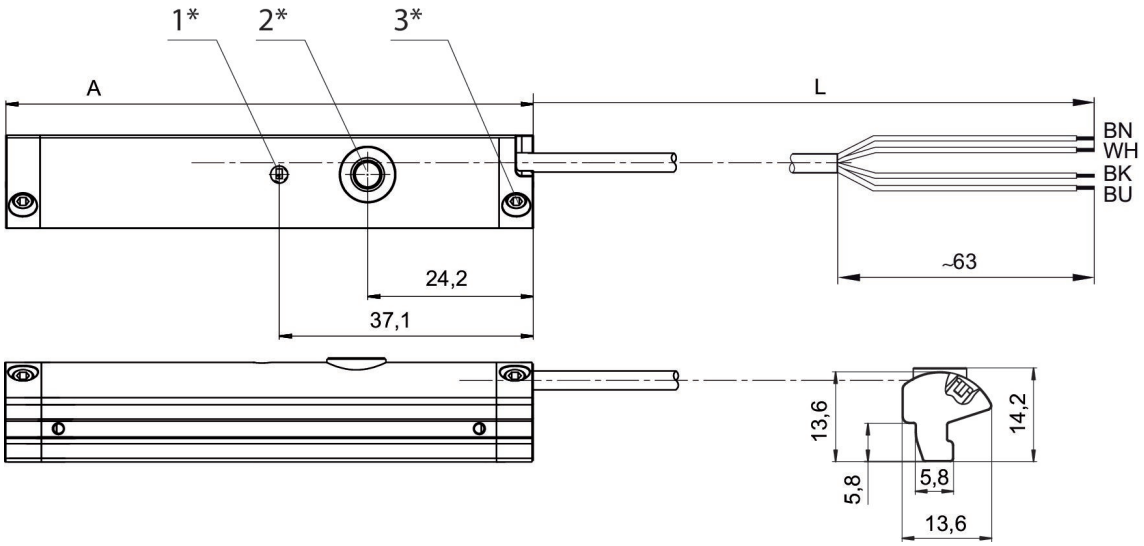

1* = LED 2* = teach button 3* = threaded pin M3x11
L = cable length
(2) WH=white
A = sensor length

Sensors, Series SM6, with cable, plug M8x1

: with cable
Certificates: cULus
Direct mounting for series: PRA, PRE, CCI, KPZ, SSI, GPC, CVI
Indirect mounting for series: TRB, ITS, 167, MNI, ICM, TRR
Electrical connection 2, thread size: M8x1
Electrical connection 2, number of poles: 4-pin
Ambient temperature min./max.: -20 °C ... 70 °C



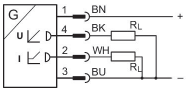

Switch descr.	Cable length L [m]	max. measuring range [mm]	Overall length Sensor [mm]	Version	Part No.
Analog	0.3	32	45	short circuit resistant, Protected against polarity reversal, Overload protection	R412010142
Analog	0.3	64	77	Protected against polarity reversal, Protected against polarity reversal, Overload protection	R412010144
Analog	0.3	96	109	Protected against polarity reversal, Protected against polarity reversal, Overload protection	R412010263
Analog	0.3	128	141	Protected against polarity reversal, Protected against polarity reversal, Overload protection	R412010265
Analog	0.3	160	173	Protected against polarity reversal, Protected against polarity reversal, Overload protection	R412010410
Analog	0.3	192	205	Protected against polarity reversal, Protected against polarity reversal, Overload protection	R412010412
Analog	0.3	224	237	Protected against po-	R412010414

Switch descr.	Cable length L [m]	max. measuring range [mm]	Overall length Sensor [mm]	Version	Part No.
				larity reversal, Protected against polarity reversal, Overload protection	
Analog	0.3	256	269	Protected against polarity reversal, Protected against polarity reversal, Overload protection	R412010416

Dimensions

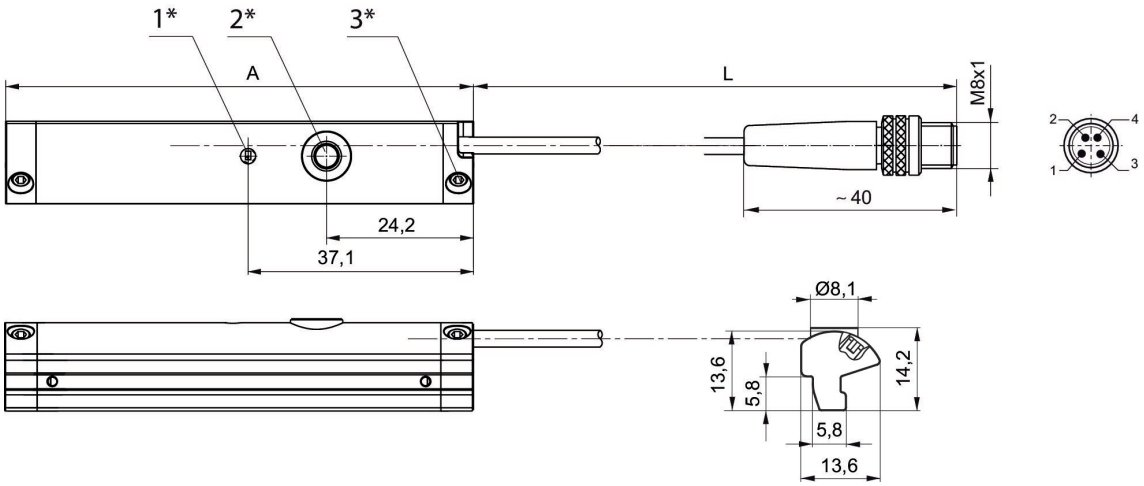

1* = LED 2* = teach button 3* = threaded pin M3x11
L = cable length
Pin assignment: 1 = (+), 2 = (OUT 1) 3 = (GND), 4 = (OUT 2), EN 60947-5-7
A = sensor length

Sensor, Series ST6

Direct mounting for series: PRA, CCI, KPZ, SSI, GPC, CVI
Indirect mounting for series: TRB, ITS, 167, C12P, CCL-IS, MNI, CSL-RD, RPC, ICS-D2, ICM, KHZ, TRR
Electrical connection 2, type: without wire end ferrule, tin-plated
Certificates: CE declaration of conformity, cULus, RoHS, UL (Underwriters Laboratories)
Ambient temperature min./max.: -30 °C ... 80 °C

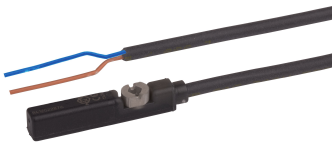

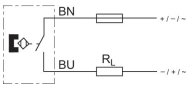

Switch descr.	Cable sheath	Number of poles	Max. DC switching current [A]	Max. AC switching current [A]	Min. operating voltage DC [V DC]	Max. operating voltage DC [V DC]	Min. operating voltage AC [V AC]	Part No.
Reed	Polyurethane	2-pin	0.13	0.13	10	230	10	R412022866
Reed	Polyurethane	2-pin	0.13	0.13	10	230	10	R412027170

Max. operational voltage AC [V AC]	Version	Cable length L [m]	Part No.
230	Protected against polarity reversal	3	R412022866
230	Protected against polarity reversal	5	R412027170

Dimensions

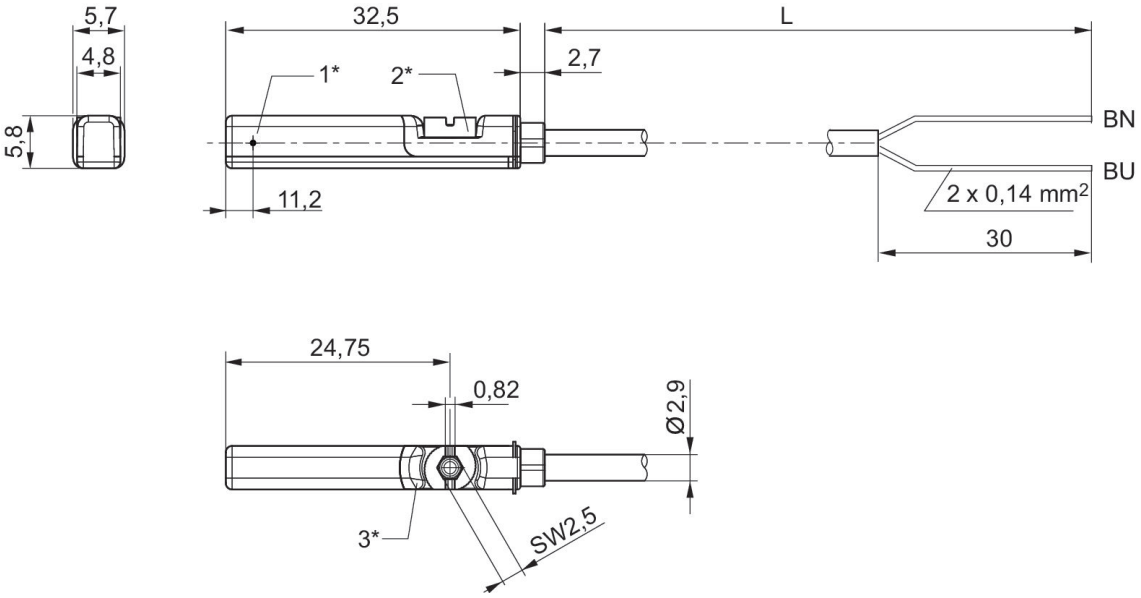

1* = switching point 2* = locking screw 3* = LED window, transparent
L = cable length BN=brown, BU=blue

Sensor, Series ST6

Direct mounting for series: PRA, PRE, CCI, KPZ, SSI, GPC, CVI
Indirect mounting for series: TRB, ITS, CCL-IS, MNI, CSL-RD, RPC, ICS-D2, ICM, KHZ, TRR
Electrical connection 2, type: without wire end ferrule, tin-plated
Certificates: CE declaration of conformity, cULus, RoHS, UL (Underwriters Laboratories)
Ambient temperature min./max.: -30 °C ... 80 °C



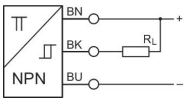

Switch descr.	Cable sheath	Number of poles	Max. DC switching current [A]	Min. operating voltage DC [V DC]	Max. operating voltage DC [V DC]	Version	Cable length L [m]	Part No.
NPN	Polyurethane	3-pin	0.13	10	30	short circuit resistant, Protected against polarity reversal	3	R412022849
NPN	Polyurethane	3-pin	0.13	10	30	short circuit resistant, Protected against polarity reversal	5	R412022850

Dimensions

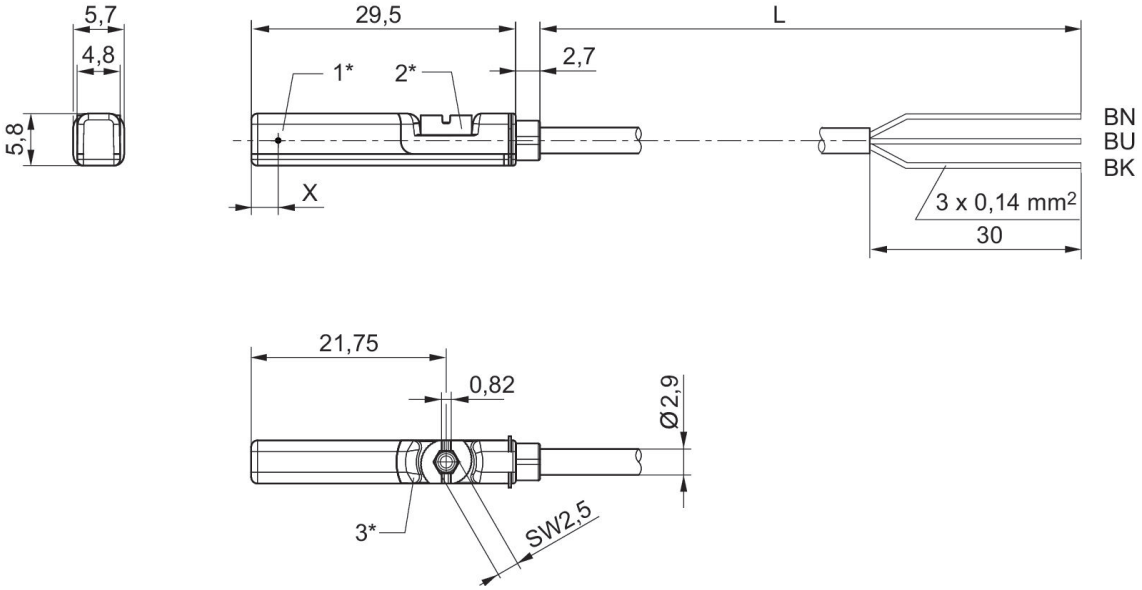

1* = switching point 2* = locking screw 3* = LED window, transparent
L = cable length BN = brown, BK = black, BU = blue
X = electronic: 11.6 mm

Sensor, Series ST6

Direct mounting for series: PRA, PRE, CCI, KPZ, SSI, GPC, CVI
Indirect mounting for series: TRB, ITS, CCL-IS, MNI, CSL-RD, RPC, ICS-D2, ICM, KHZ, TRR
Electrical connection 2, type: without wire end ferrule, tin-plated
Certificates: CE declaration of conformity, cULus, RoHS, UL (Underwriters Laboratories)
Ambient temperature min./max.: -30 °C ... 80 °C



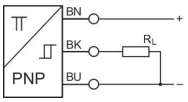

Switch descr.	Cable sheath	Number of poles	Max. DC switching current [A]	Min. operating voltage DC [V DC]	Max. operating voltage DC [V DC]	Version	Cable length L [m]	Part No.
PNP	Polyurethane	3-pin	0.13	10	30	short circuit resistant, Protected against polarity reversal	3	R412022853
PNP	Polyurethane	3-pin	0.13	10	30	short circuit resistant, Protected against polarity reversal	5	R412022855
PNP	Polyurethane	3-pin	0.13	10	30	short circuit resistant, Protected against polarity reversal	10	R412022857

Dimensions

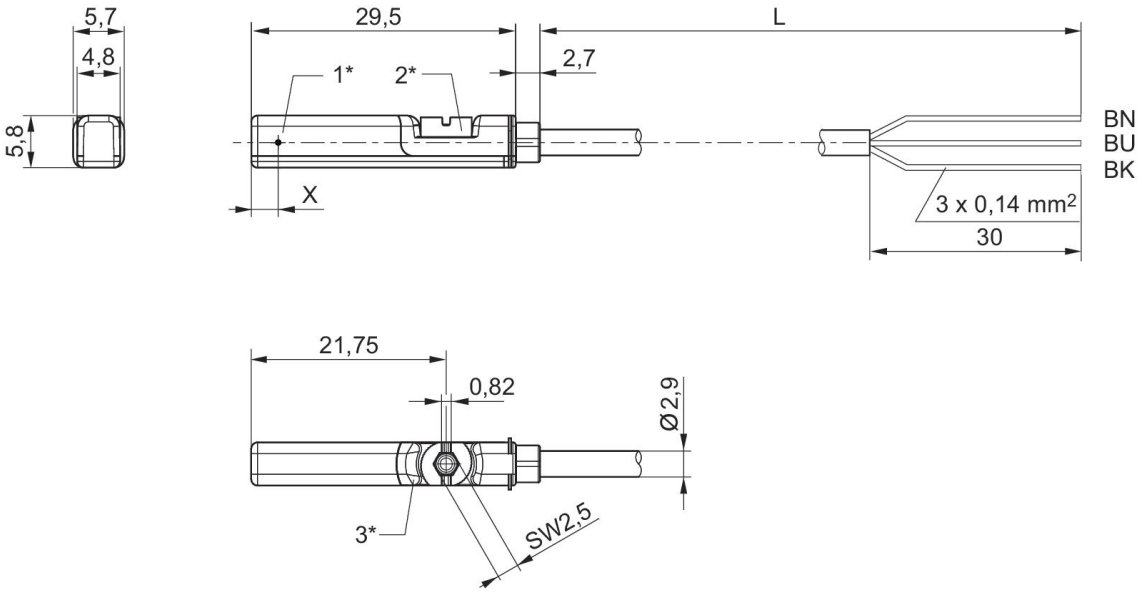

1* = switching point 2* = locking screw 3* = LED window, transparent
L = cable length BN = brown, BK = black, BU = blue
X = electronic: 11.6 mm

Sensor, Series ST6

Direct mounting for series: PRA, PRE, CCI, KPZ, SSI, GPC, CVI
Indirect mounting for series: TRB, ITS, CCL-IS, MNI, CSL-RD, RPC, ICS-D2, ICM, KHZ, TRR
Electrical connection 2, type: without wire end ferrule, tin-plated
Certificates: CE declaration of conformity, cULus, RoHS, UL (Underwriters Laboratories)
Ambient temperature min./max.: -30 °C ... 80 °C



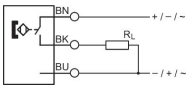

Switch descr.	Cable sheath	Number of poles	Max. DC switching current [A]	Max. AC switching current [A]	Min. operating voltage DC [V DC]	Max. operating voltage DC [V DC]	Min. operating voltage AC [V AC]	Part No.
Reed	Polyurethane	3-pin	0.3	0.5	10	30	10	R412022869
Reed	Polyurethane	3-pin	0.3	0.5	10	30	10	R412022870
Reed	Polyurethane	3-pin	0.3	0.5	10	30	10	R412022871

Max. operational voltage AC [V AC]	Version	Cable length L [m]	Part No.
30	Protected against polarity reversal	3	R412022869
30	Protected against polarity reversal	5	R412022870
30	Protected against polarity reversal	10	R412022871

Dimensions

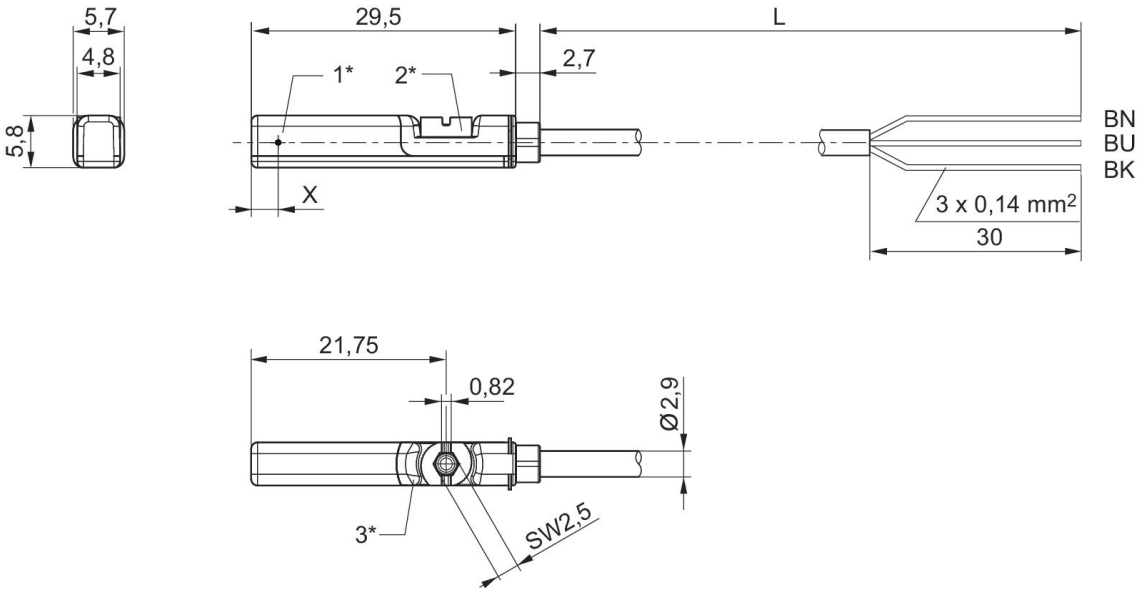

1* = switching point 2* = locking screw 3* = LED window, transparent
L = cable length BN = brown, BK = black, BU = blue
X = electronic: 11.6 mm

Sensor, Series ST6

Direct mounting for series: PRA, PRE, CCI, KPZ, SSI, GPC, CVI
Indirect mounting for series: TRB, ITS, CCL-IS, MNI, CSL-RD, RPC, ICS-D2, ICM, KHZ, TRR
ATEX class G: II 3G Ex nA IIC T4 Gc X
ATEX class D: II 3D Ex tc IIIC T135°C Dc X
Electrical connection 2, type: open cable ends
Certificates: ATEX, CE declaration of conformity, cULus, RoHS, UL (Underwriters Laboratories)
Ambient temperature min./max.: -20 °C ... 50 °C



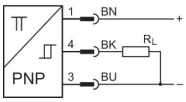

Switch descr.	Cable sheath	Number of poles	Max. DC switching current [A]	Min. operating voltage DC [V DC]	Max. operating voltage DC [V DC]	Version	Cable length L [m]	Part No.
PNP	Polyurethane	3-pin	0.1	10	30	short circuit resistant, Protected against polarity reversal	3	R412022854
PNP	Polyurethane	3-pin	0.1	10	30	short circuit resistant, Protected against polarity reversal	5	R412022856

Dimensions

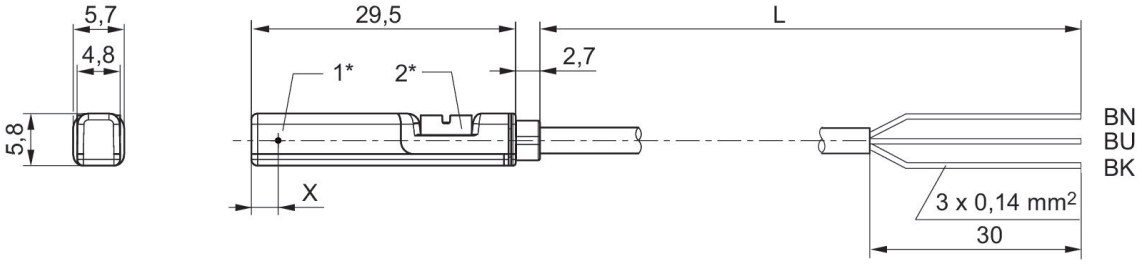

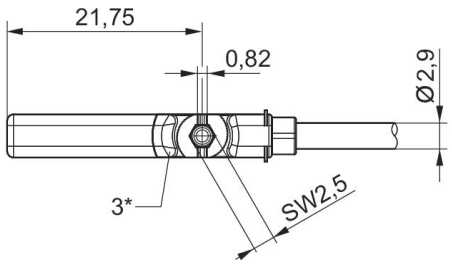

1* = switching point 2* = locking screw 3* = LED window, transparent
L = cable length BN = brown, BK = black, BU = blue
X = electronic: 11.6 mm

Sensor, Series ST6

Direct mounting for series: PRA, PRE, CCI, KPZ, SSI, GPC, CVI
Indirect mounting for series: TRB, ITS, CCL-IS, MNI, CSL-RD, RPC, ICS-D2, ICM, KHZ, TRR
Electrical connection 2, type: Plug
Certificates: CE declaration of conformity, cULus, RoHS, UL (Underwriters Laboratories)
Electrical connection 2, number of poles: 3-pin
Ambient temperature min./max.: -30 °C ... 80 °C



	Switch descr.	Cable sheath	Electrical interface 2	Number of poles	Max. DC switching current [A]	Max. AC switching current [A]	Min. operating voltage DC [V DC]	Part No.
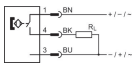	Reed	Polyurethane	M8x1	3-pin	0.3	0.5	10	R412022873
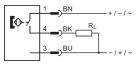	Reed	Polyvinyl chloride	M8x1	3-pin	0.3	0.5	10	R412022875
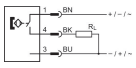	Reed	Polyurethane	M8x1	3-pin	0.3	0.5	10	R412022874
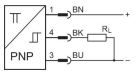	electronic PNP	Polyurethane	M8x1	3-pin	0.13		10	R412022859
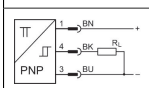	electronic PNP	Polyvinyl chloride	M8x1	3-pin	0.13		10	R412022862
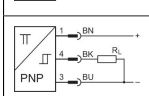	electronic PNP	Polyurethane	M8x1	3-pin	0.13		10	R412022861
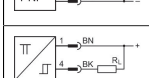	NPN	Polyurethane	M8x1	3-pin	0.13		10	R412022852

Max. operating voltage DC [V DC]	Min. operating voltage AC [V AC]	Max. operational voltage AC [V AC]	Version	Cable length L [m]	Part No.
30	10	30	Protected against polarity reversal	0.3	R412022873
30	10	30	Protected against polarity reversal	0.3	R412022875
30	10	30	Protected against polarity reversal	0.5	R412022874
30			short circuit resistant, Protected against polarity reversal	0.3	R412022859

Max. operating voltage DC [V DC]	Min. operating voltage AC [V AC]	Max. operational voltage AC [V AC]	Version	Cable length L [m]	Part No.
30			short circuit resistant, Protected against polarity reversal	0.3	R412022862
30			short circuit resistant, Protected against polarity reversal	0.5	R412022861
30			short circuit resistant, Protected against polarity reversal	0.3	R412022852

Dimensions

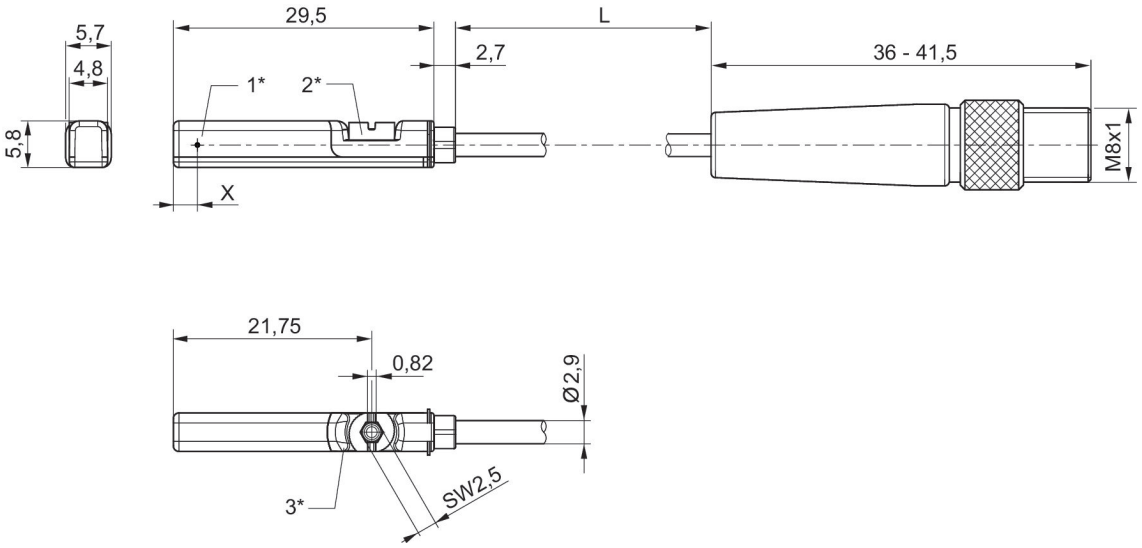

1* = switching point 2* = locking screw 3* = LED window, transparent
L = cable length
X = electronic: 11,6 mm, Reed: 8,3 mm

R412022873, R412022875, R412022874, R412022859, R412022862, R412022861, R412022852

Pin assignment M8x1 (3-pin)

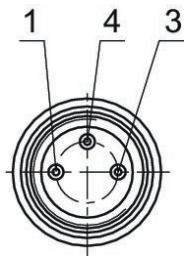

Pin	Allocation
1	(+)
3	(-)
4	(OUT)

Sensor, Series ST6

Direct mounting for series: PRA, PRE, CCI, KPZ, SSI, GPC, CVI
Indirect mounting for series: TRB, ITS, CCL-IS, MNI, CSL-RD, RPC, ICS-D2, ICM, KHZ, TRR
Electrical connection 2, type: Plug
Certificates: CE declaration of conformity, cULus, RoHS, UL (Underwriters Laboratories)
Electrical connection 2, number of poles: 3-pin
Ambient temperature min./max.: -30 °C ... 80 °C



	Switch descr.	Cable sheath	Electrical interface 2	Number of poles	Max. DC switching current [A]	Max. AC switching current [A]	Min. operating voltage DC [V DC]	Part No.
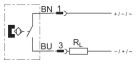	Reed	Polyurethane	M8x1	3-pin	0.13	0.13	10	R412022868
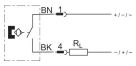	Reed	Polyurethane	M8x1	2-pin	0.13	0.13	10	R412027172
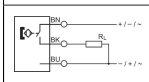	Reed	Polyurethane	M8x1	3-pin	0.3	0.5	10	R412022872
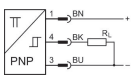	electronic PNP	Polyurethane	M8x1	3-pin	0.13		10	R412022858
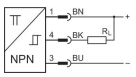	NPN	Polyurethane	M8x1	3-pin	0.13		10	R412022851

Max. operating voltage DC [V DC]	Min. operating voltage AC [V AC]	Max. operational voltage AC [V AC]	Version	Cable length L [m]	Part No.
30	10	30	Protected against polarity reversal	0.3	R412022868
30	10	30	Protected against polarity reversal	0.3	R412027172
30	10	30	Protected against polarity reversal	0.3	R412022872
30			short circuit resistant, Protected against polarity reversal	0.3	R412022858
30			short circuit resistant, Protected against polarity reversal	0.3	R412022851

Dimensions

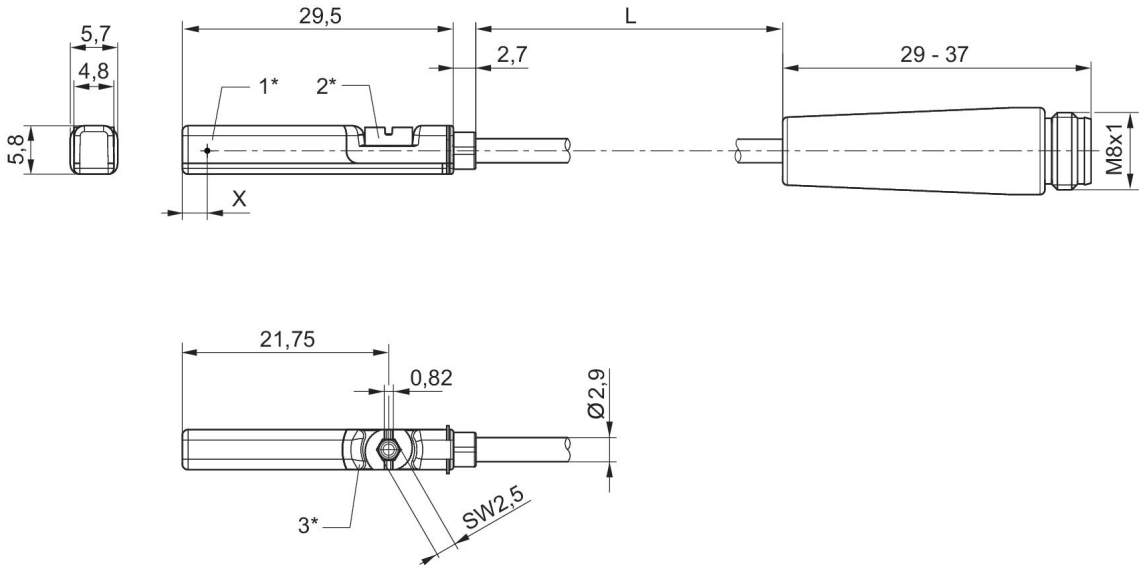

1* = switching point 2* = locking screw 3* = LED window, transparent
L = cable length
X = electronic: 11,6 mm, Reed: 8,3 mm

Sensor, Series ST6

Direct mounting for series: PRA, PRE, CCI, KPZ, SSI, GPC, CVI
Indirect mounting for series: TRB, ITS, CCL-IS, MNI, CSL-RD, RPC, ICS-D2, ICM, KHZ, TRR
ATEX class G: II 3G Ex nA IIC T4 Gc X
ATEX class D: II 3D Ex tc IIIC T135°C Dc X
Electrical connection 2, type: Plug
Certificates: ATEX, CE declaration of conformity, cULus, RoHS, UL (Underwriters Laboratories)
Electrical connection 2, number of poles: 3-pin
Ambient temperature min./max.: -20 °C ... 50 °C



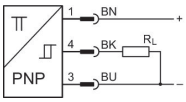

Switch descr.	Cable sheath	Electrical interface 2	Number of poles	Max. DC switching current [A]	Min. operating voltage DC [V DC]	Max. operating voltage DC [V DC]	Version	Part No.
PNP	Polyurethane	M8x1	3-pin	0.1	10	30	short circuit resistant, Protected against polarity reversal	R412022860

Cable length L [m]	Part No.
0.3	R412022860

Dimensions

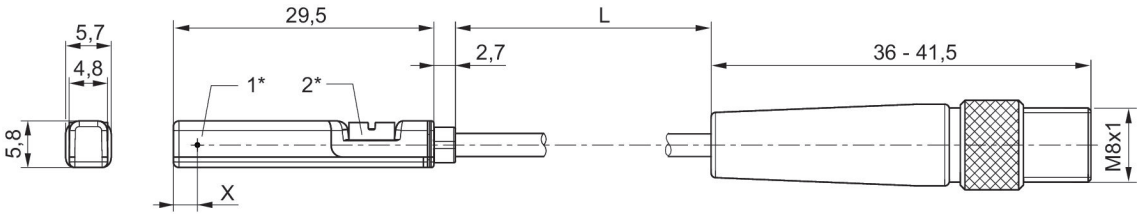

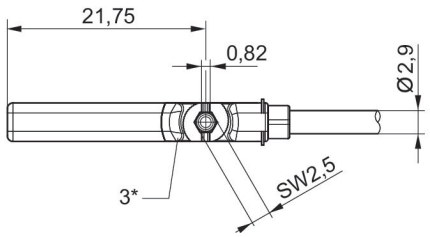

1* = switching point 2* = locking screw 3* = LED window, transparent
L = cable length
X = electronic: 11,6 mm, Reed: 8,3 mm

R412022860

Pin assignment M8x1 (3-pin)

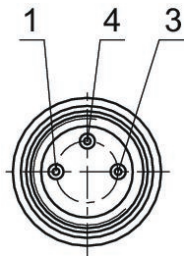

Pin	Allocation
1	(+)
3	(-)
4	(OUT)

Sensor, Series ST6

Direct mounting for series: PRA, PRE, CCI, KPZ, SSI, GPC, CVI
Indirect mounting for series: TRB, ITS, CCL-IS, MNI, CSL-RD, RPC, ICS-D2, ICM, KHZ, TRR
Electrical connection 2, type: Plug
Certificates: CE declaration of conformity, cULus, RoHS, UL (Underwriters Laboratories)
Electrical connection 2, number of poles: 3-pin
Ambient temperature min./max.: -30 °C ... 80 °C



	Switch descr.	Cable sheath	Electrical interface 2	Number of poles	Max. DC switching current [A]	Max. AC switching current [A]	Min. operating voltage DC [V DC]	Part No.
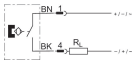	Reed	Polyurethane	M12x1	2-pin	0.13	0.13	10	R412027171
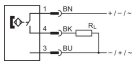	Reed	Polyurethane	M12x1	3-pin	0.3	0.5	10	R412022876
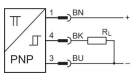	electronic PNP	Polyurethane	M12x1	3-pin	0.13		10	R412022879
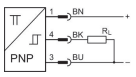	electronic PNP	Polyurethane	M12x1	3-pin	0.13		10	R412022863
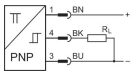	electronic PNP	Polyurethane	M12x1	3-pin	0.13		10	R412022877
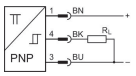	electronic PNP	Polyurethane	M12x1	3-pin	0.13		10	R412022878

Max. operating voltage DC [V DC]	Min. operating voltage AC [V AC]	Max. operational voltage AC [V AC]	Version	Cable length L [m]	Part No.
30	10	30	Protected against polarity reversal	0.3	R412027171
30	10	30	Protected against polarity reversal	0.3	R412022876
30			short circuit resistant, Protected against polarity reversal	0.1	R412022879
30			short circuit resistant, Protected against polarity reversal	0.3	R412022863
30			short circuit resistant, Protected against	3	R412022877

Max. operating voltage DC [V DC]	Min. operating voltage AC [V AC]	Max. operational voltage AC [V AC]	Version	Cable length L [m]	Part No.
			polarity reversal		
30			short circuit resistant, Protected against polarity reversal	5	R412022878

Dimensions

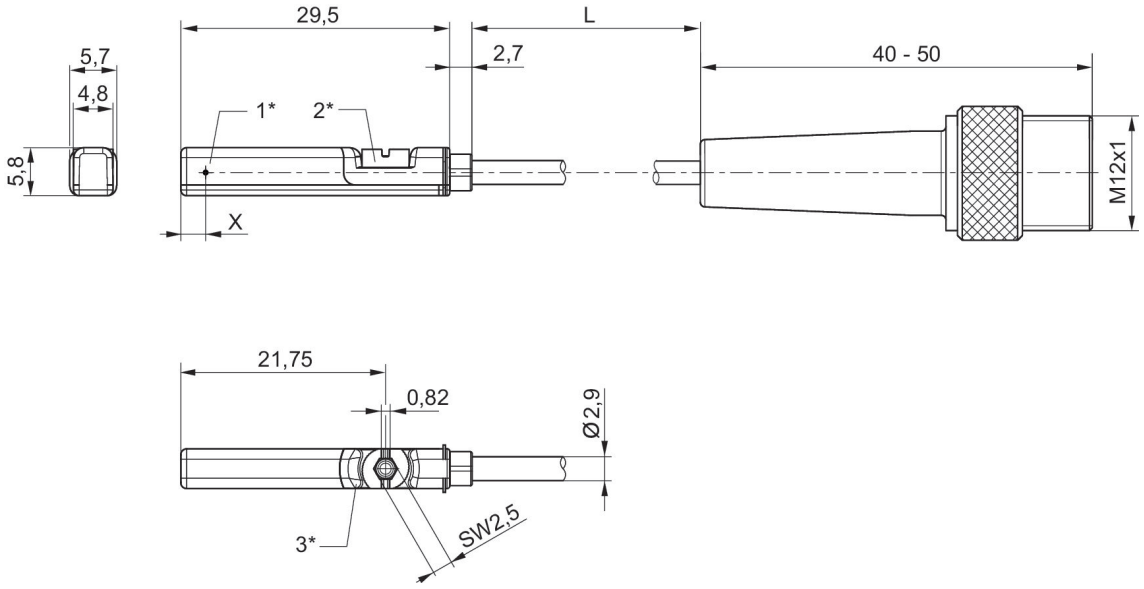

1* = switching point 2* = locking screw 3* = LED window, transparent
L = cable length
X = PNP: 11,6 mm, reed: 8,3 mm

Sensor, Series ST6

Direct mounting for series: PRA, PRE, CCI, KPZ, SSI, GPC, CVI
Indirect mounting for series: TRB, ITS, CCL-IS, MNI, CSL-RD, RPC, ICS-D2, ICM, KHZ, TRR
ATEX class G: II 3G Ex nA IIC T4 Gc X
ATEX class D: II 3D Ex tc IIIC T135°C Dc X
Electrical connection 2, type: Plug
Certificates: ATEX, CE declaration of conformity, cULus, RoHS, UL (Underwriters Laboratories)
Electrical connection 2, number of poles: 3-pin
Ambient temperature min./max.: -20 °C ... 50 °C



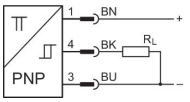

Switch descr.	Cable sheath	Electrical interface 2	Number of poles	Max. DC switching current [A]	Min. operating voltage DC [V DC]	Max. operating voltage DC [V DC]	Version	Part No.
PNP	Polyurethane	M12x1	3-pin	0.1	10	30	short circuit resistant, Protected against polarity reversal	R412022864

Cable length L [m]	Part No.
0.3	R412022864

Dimensions

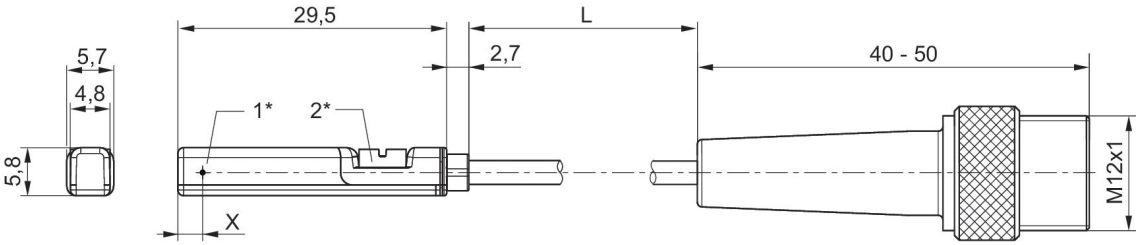

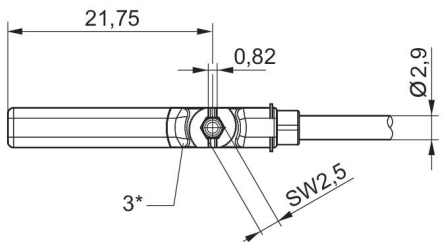

1* = switching point 2* = locking screw 3* = LED window, transparent
L = cable length
X = PNP: 11,6 mm, reed: 8,3 mm

R412022864

Pin assignments

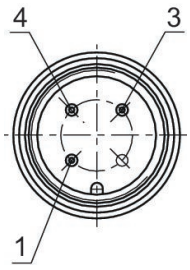

Pin	Allocation
1	(+)
3	(-)
4	(OUT)

Sensor mounting, Series CB1

To mount on series: ST6, SM6
Direct mounting for series: 167



Max. cylinder Ø [mm]	Material	Part No.
25	Aluminum	R412022357

Dimensions

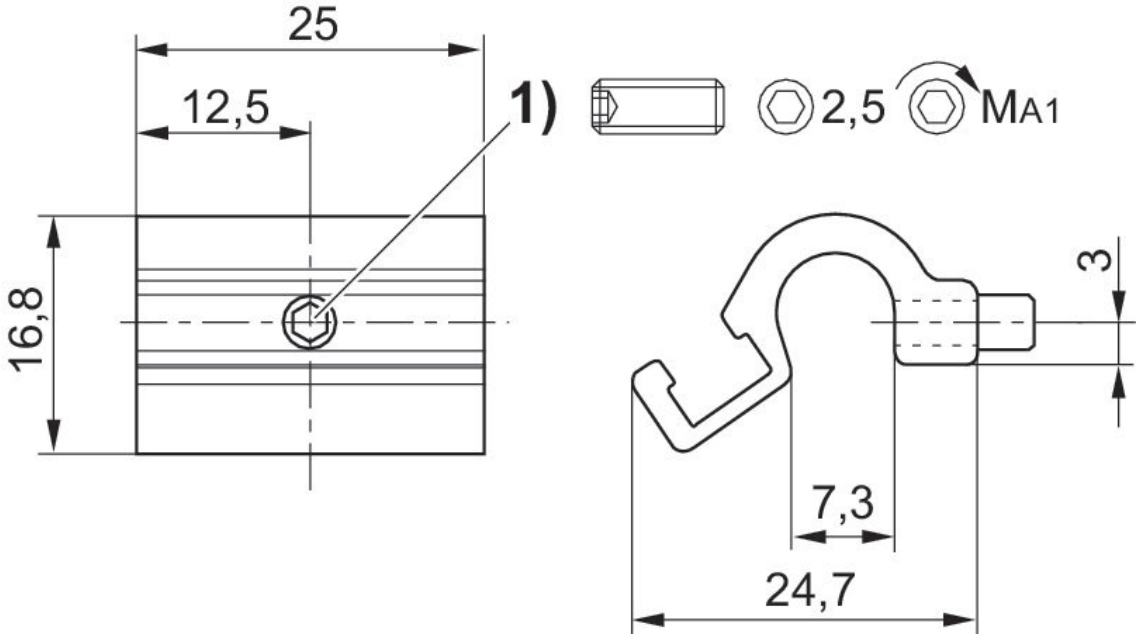

1) Mounting screw

Part No.	Cylinders Ø max.	MA1 [Nm]
R412022357	25 mm	1 + 0,3

Sensor mounting, Series CB1

To mount on series: ST6, SM6
Direct mounting for series: TRB, C12P, 167, CVI, TRR, 523



Min. cylinder Ø [mm]	Max. cylinder Ø [mm]	Material	Part No.
32	40	Aluminum	1827020282
50	63	Aluminum	1827020283
80	100	Aluminum	1827020284

Dimensions

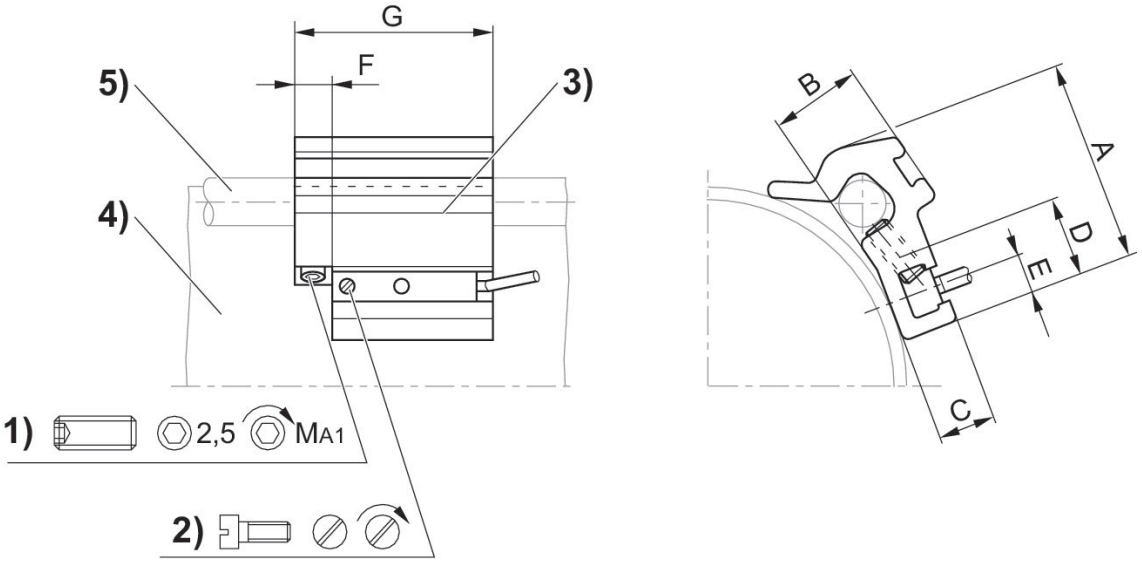

1) Clamping threaded pin 2) Mounting screw for sensor 3) Sensor 4) Cylinder profile 5) Tie rod

Part No.	Cylinders Ø	A	B	C	D	E	F	G	Clamping threaded pin
1827020282	32 - 40 mm	26	10	7	14	5	8	40	M5x8
1827020283	50 - 63 mm	32.5	15.5	7	14	5	8	40	M5x10
1827020284	80 - 100 mm	43	17	6.9	14	5	8	40	M5x16

Part No.	MA1 [Nm]
1827020282	2 ±0,2
1827020283	2 ±0,2
1827020284	2 ±0,2

Round plug connector, Series CON-RD

Electrical connection 1: Socket ... M8x1 ... 3-pin ... straight
Connection type: Soldering
Ambient temperature min./max.: -25 °C ... 80 °C



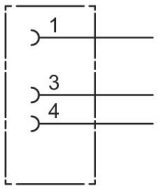

Operational voltage	Coding	Shielding	Connection type	Max. current [A]	min. suitable cable Ø [mm]	max. suitable cable Ø [mm]	Part No.
48 V AC/DC	A-coded	unshielded	Soldering	4	3.5	5	1834484173

Dimensions

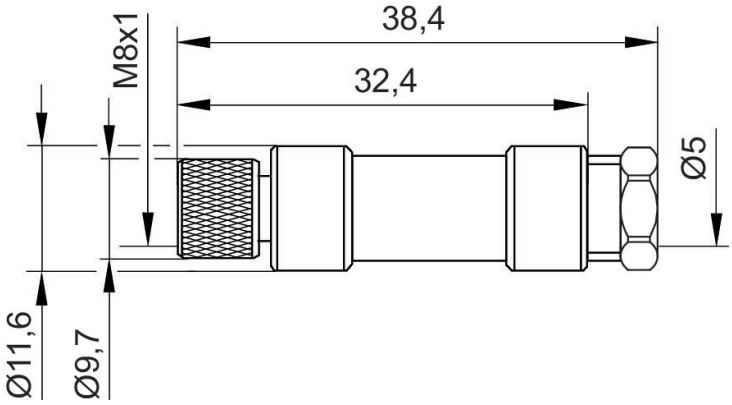

1834484173

Pin assignment, socket

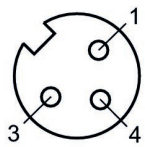

Round plug connector, Series CON-RD

Electrical connection 1: Socket ... M8x1 ... 3-pin ... angled
Connection type: Soldering
Ambient temperature min./max.: -25 °C ... 80 °C



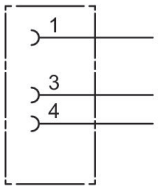

Operational voltage	Coding	Shielding	Connec-tion type	Max. current [A]	min. suit-able cable Ø [mm]	max. suit-able cable Ø [mm]	Part No.
48 V AC/DC	A-coded	unshielded	Soldering	4	3.5	5	1834484174

Dimensions in mm

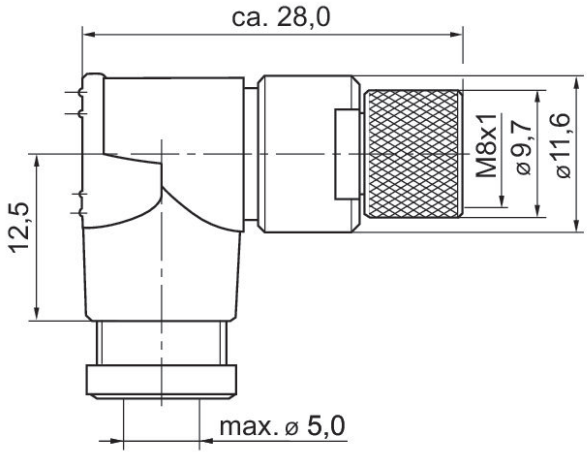

1834484174

Pin assignment, socket

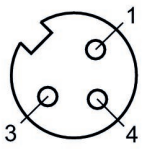

Round plug connector, Series CON-RD

Electrical connection 1: Socket ... M8x1 ... 3-pin ... straight
Electrical connection 2: open cable ends ... 3-pin
Certification: UL (Underwriters Laboratories)
Ambient temperature min./max.: -25 °C ... 85 °C



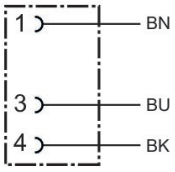

Operational voltage	Electrical connection 1, type	Electrical connection 1, thread size	Electrical connection 1, number of poles	Electrical connection 1, coding	Electrical connection 2, type	Electrical connection 2, number of poles	Cable length [m]	Part No.
48 V AC/DC	Socket	M8x1	3-pin	A-coded	open cable ends	3-pin	3	1834484166
48 V AC/DC	Socket	M8x1	3-pin	A-coded	open cable ends	3-pin	5	1834484168
48 V AC/DC	Socket	M8x1	3-pin	A-coded	open cable ends	3-pin	10	1834484247

Dimensions

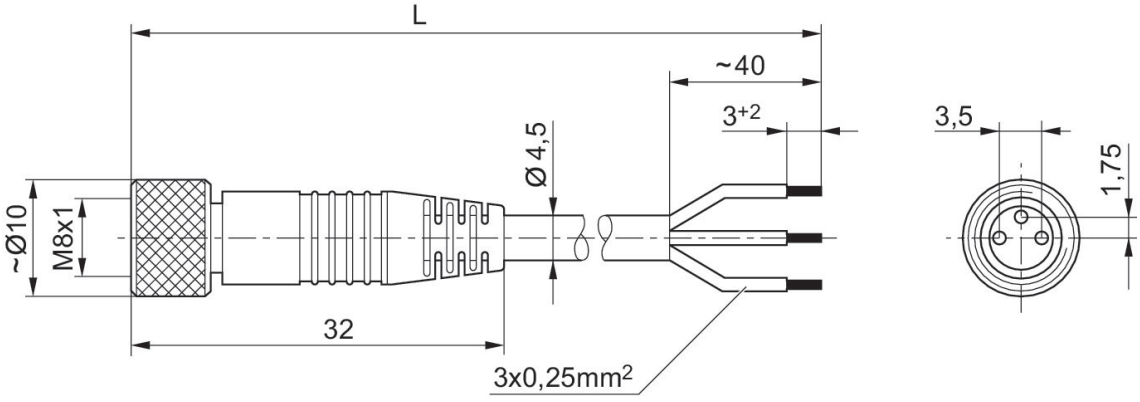

L = length

1834484166, 1834484168, 1834484247

Pin assignment, socket

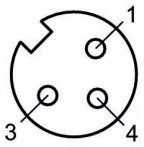

(1) BN=brown (3) BU=blue (4) BK=black

Round plug connector, Series CON-RD

Electrical connection 1: Socket ... M8x1 ... 3-pin ... angled
Electrical connection 2: open cable ends ... 3-pin
Ambient temperature min./max.: -40 °C ... 85 °C



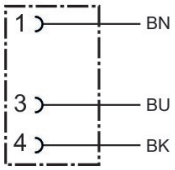

Operational voltage	Electrical connection 1, type	Electrical connection 1, thread size	Electrical connection 1, number of poles	Electrical connection 1, coding	Electrical connection 2, type	Electrical connection 2, number of poles	Cable length [m]	Part No.
48 V AC/DC	Socket	M8x1	3-pin	A-coded	open cable ends	3-pin	3	1834484167
48 V AC/DC	Socket	M8x1	3-pin	A-coded	open cable ends	3-pin	5	1834484169
48 V AC/DC	Socket	M8x1	3-pin	A-coded	open cable ends	3-pin	10	1834484248

Dimensions

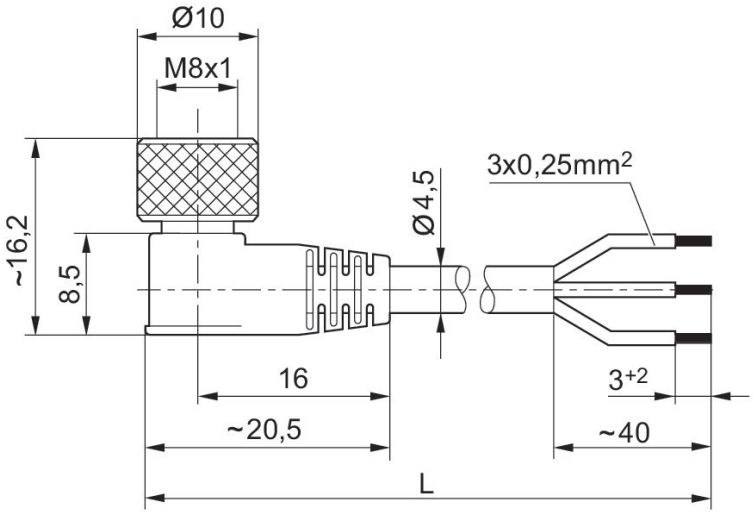

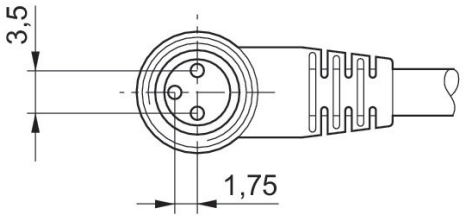

L = length

1834484167, 1834484169, 1834484248

Pin assignment, socket

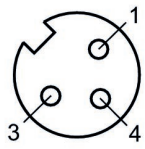

(1) BN=brown (3) BU=blue (4) BK=black

AVENTICS Series SI1 Silencers

Compressed air connection type: External thread
Silencer material: Sintered bronze
Ambient temperature min./max.: -25 °C ... 80 °C
Working pressure min./max.: 0 bar ... 10 bar





G	Sound pressure level [dB]	Nominal flow [l/min]	Delivery unit [piece]	Weight [kg]	Part No.
G 1/8	75	1623	10	0.01	1827000000
G 1/4	79	3390	10	0.02	1827000001
G 3/8	84	6554	5	0.05	1827000002
G 1/2	90	7223	2	0.08	1827000003

1827000000

Dimensions in mm

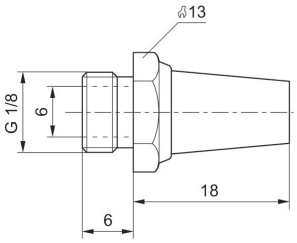

1827000001

Dimensions in mm

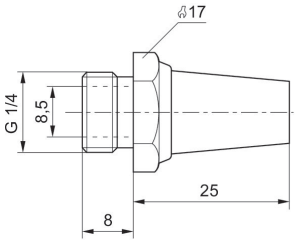

1827000002

Dimensions in mm

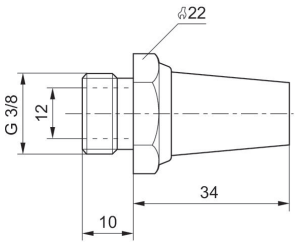

1827000003

Dimensions in mm

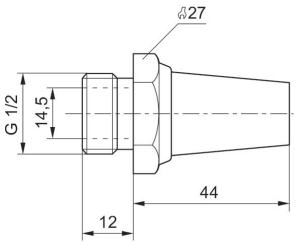

Flow diagram

1827000000

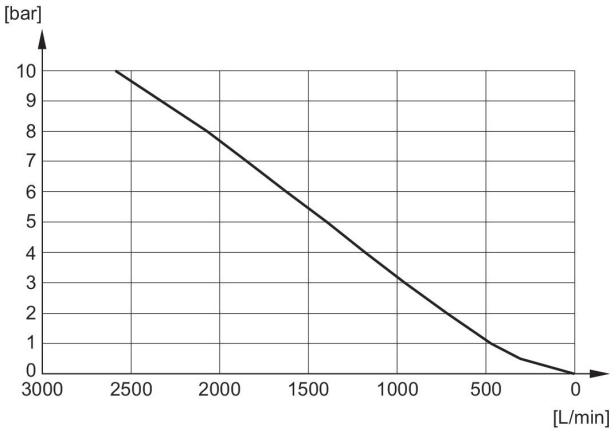

Flow diagram

1827000001

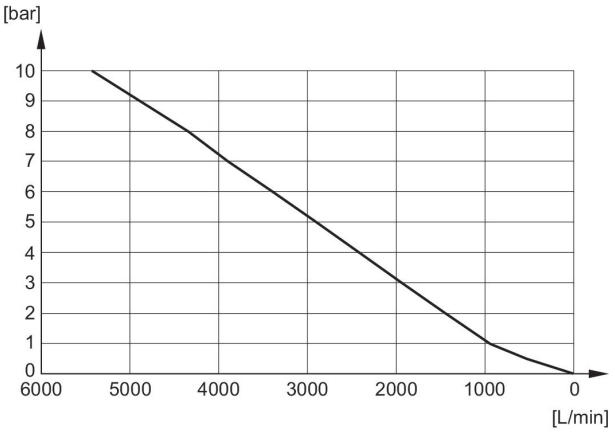

Flow diagram

1827000002

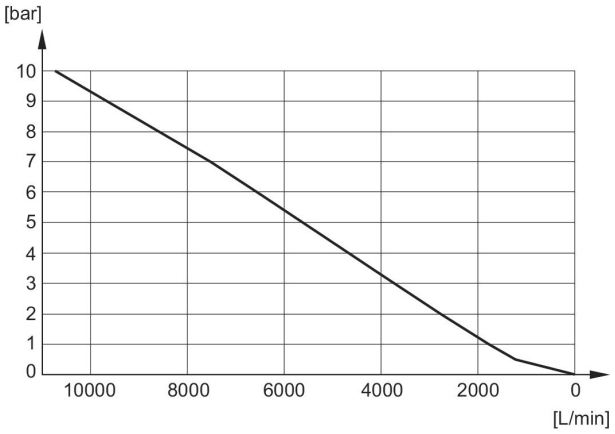

Flow diagram

1827000003

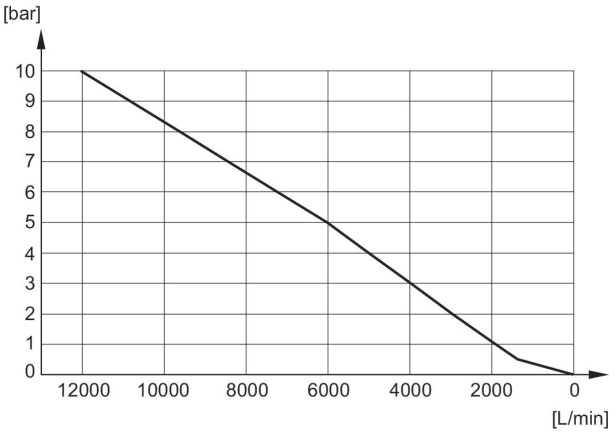

AVENTICS Series SI1 Silencers

Compressed air connection type: External thread
Silencer material: Sintered bronze
Ambient temperature min./max.: -25 °C ... 80 °C
Working pressure min./max.: 0 bar ... 10 bar





G	Sound pressure level [dB]	Nominal flow [l/min]	Delivery unit [piece]	Weight [kg]	Part No.
G 1/8	85	700	10	0.001	1827000031
G 1/4	88	1116	10	0.01	1827000033
G 3/8	90	1706	5	0.016	1827000034
G 1/2	85	2568	2	0.035	1827000035

Dimensions

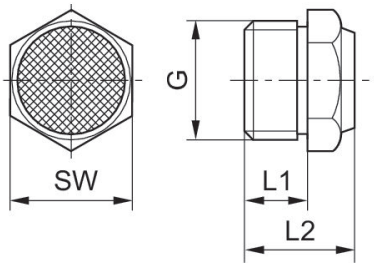

Part No.	Port G	L1	L2	SW
1827000032	M5	5	10.3	7
1827000031	G 1/8	6	11.5	13
1827000033	G 1/4	8	13.5	17
1827000034	G 3/8	10	17.5	22
1827000035	G 1/2	12	19.5	27
8145003400	G 3/4	14	22.5	32
8145001000	G 1	16	22.5	41

Sound pressure level measured at 6 bar at 1 m distance

Flow diagram1827000032

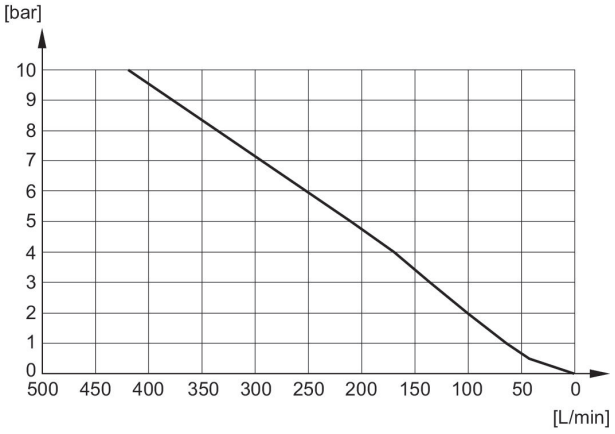

Flow diagram 1827000031

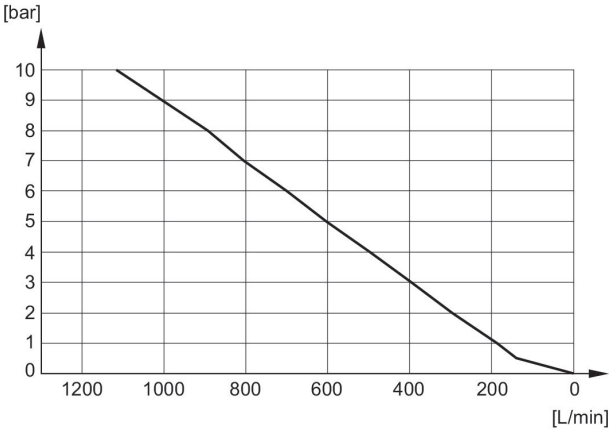

Flow diagram 1827000033

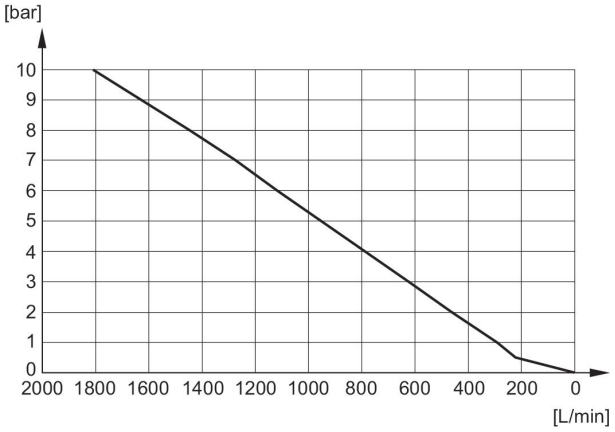

Flow diagram 1827000034

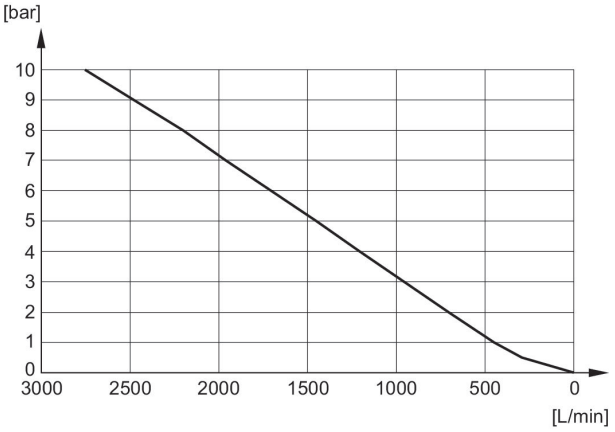

Flow diagram 1827000035

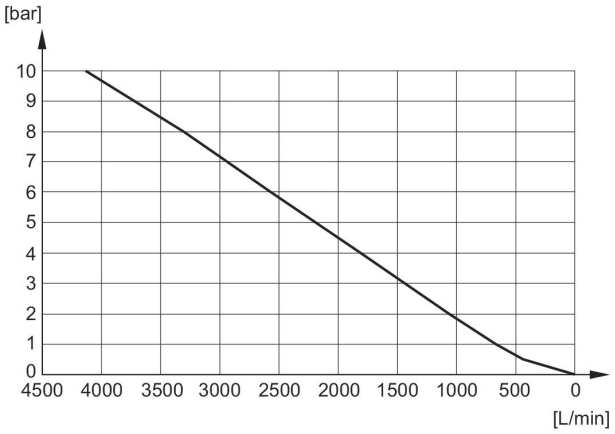

Flow diagram 8145003400

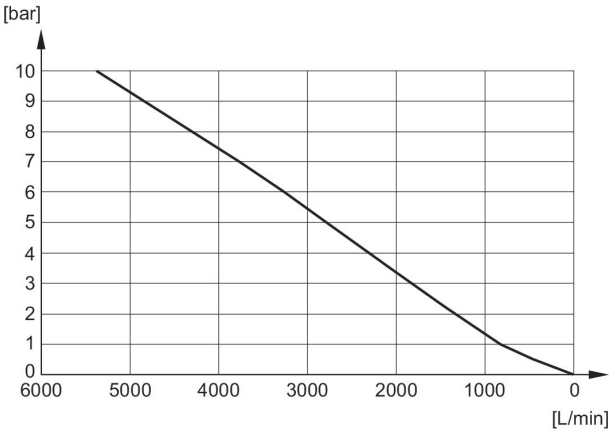

Flow diagram 8145001000

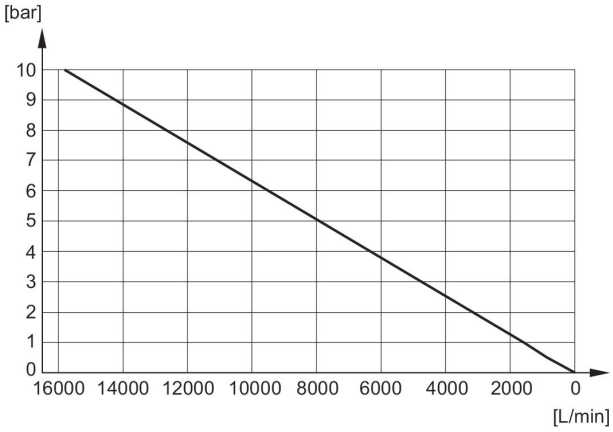

Efficient pneumatic solutions, our program: cylinders and drives, valves and valve systems, air supply management, proportional pressure control valves







Visit us: **www.Emerson.com/aventics**
Your local contact: **Emerson.com/contactus**

Emerson.com
Facebook.com/EmersonAutomationSolutions
LinkedIn.com/company/Emerson-Automation-Solutions
Twitter.com/EMR_Automation

The Emerson logo is a trademark and service mark of Emerson Electric Co. AVENTICS is a registered trademark of one of the Emerson family of companies. All other trademarks are the property of their respective owners. © 2020 Emerson Electric Co. All rights reserved.

EMERSON.

CONSIDER IT SOLVED®